ORCO Block Company, Inc.

Stanton
(714) 527-2239
orco.com

If you have questions about specific products or services we provide, please don't hesitate to contact us.

SRW Design Manual

• Design • Specifications • Construction • Maintenance

MASONRY & HARDSCAPES

masonryandhardscapes.org

Design Manual for
Segmental Retaining Walls

National Concrete Masonry Association
3rd Edition

5th Printing

NATIONAL
NCMA
CONCRETE MASONRY
ASSOCIATION

ABOUT THIS PUBLICATION

The Design Manual for Segmental Retaining Walls (SRW) is a publication of the National Concrete Masonry Association. The first edition of the Design Manual was published in 1993 and a second one in 1997. Over the last decade, there have been significant changes in the state-of-knowledge regarding mechanically stabilized earth (MSE) and SRWs. These changes have been incorporated into the third edition of this Design Manual.

The technical editors of the first edition, Michael R. Simac, P.E., Richard J. Bathurst, Ph.D., P.Eng., Ryan R. Berg, P.E. and Steven Lothspeich, P.E. and the second edition, James G. Collin, Ph.D., P.E., are greatly acknowledged for their contribution on establishing the methodology on past editions.

The Design Manual is under the direct responsibility of the NCMA SRW and Hardscape Products Committee, NCMA SRW Technical Subcommittee and its SRW Design Manual Task Group.

ACKNOWLEDGEMENTS

The primary technical editor of the third edition is recognized for his significant contribution toward the development of this Design Manual and the associated advancement of the state-of-the-art in SRW design and construction:
Michael Bernardi, P.E. with REDI Engineering, Inc.

NCMA recognizes the collaboration of Dov Leshchinsky, Ph.D. for his technical guidance on the present document.

NCMA acknowledges with appreciation Allan Block Corporation for their efforts on developing the internal compound stability (ICS) analysis and modeling approach and their full scale seismic research, as well as the continuous work of the SRW Design Manual Task Group members that oversaw the completion of this publication.

NCMA SRW DESIGN MANUAL TASK GROUP
Karen Nelson, VERSA-LOK Retaining Wall Systems – Chair

Donal J. Armstrong, Anchor Wall Systems, Inc.
Michael Bernardi, REDI Engineering, Inc.
Richard M. Bodie, Pavestone Company
Timothy A. Bott, Allan Block Corporation
Robert D. Bowers, Nilex, Inc.
R. Lance Carter, Strata Systems, Inc.
Joe Friederichs, Keystone Retaining Wall Systems, Inc.
Jan E. Jansson, Soil Retention Products
Steven E. Lothspeich, Huesker, Inc
Cameron Roberson, Rockwood Retaining Walls, Inc.
Dean B. Sandri, Anchor Wall Systems, Inc
Brendan Sheppard, Tensar International Corp, LLC
Stephen Valero, Pinnacle Design/Build Group, Inc
Tom Zeisler, Kirchner Block & Brick, Inc.
Gabriela Mariscal, Staff Laision

ABOUT NCMA

The National Concrete Masonry Association (NCMA) is an international trade association representing producers and suppliers in the concrete masonry and hardscape industry. The Association is dedicated to the advancement of manufactured concrete products through research, promotion, education, and the development of manufacturing guides, design codes and resources, testing standards, and construction practices.

NCMA promotes the use of segmental retaining wall products through the development and dissemination of technical information. This manual was prepared by NCMA and is intended as a guide for engineers and architects. The material presented herein has been reviewed by numerous individuals from a variety of backgrounds to ensure the enclosed information is accurate and conforms to current engineering practices. However, NCMA assumes no responsibility for errors or omissions resulting from the use of this manual.

Errata associated with this manual, if any, can be found in the Resources section of the NCMA website (www.ncma.org).

All illustrations and other graphic representation published in this manual are property of NCMA unless otherwise noted.

NCMA Engineering Staff

Robert D. Thomas —*President*
Jason J. Thompson — *Director of Engineering*
Dennis W. Graber — *Director of Technical Publications*
Nathan A. Cotton — *Engineering Projects Manager*
Gabriela Mariscal — *Geotechnical Engineer*
Nicholas Lang —*Manager, Research & Development Laboratory*
Gary R. Sturgeon — *Technical Services Engineer*

Copyright © 2010 National Concrete Masonry Association
13750 Sunrise Valley Drive
Herndon, VA 20171-4662
(703) 713-1900

ISBN 1-881384-02-5
NCMA Publication Number TR 127B
Fifth printing, January, 2012

This book was laid out by Resimont Products, Inc.

TABLE OF CONTENTS

SECTION 1: INTRODUCTION 1
1.1: Purpose and Scope of Manual 1
1.2: Organization of the Manual 1
1.3: Design Philosophy 2
1.4: History of Segmental Retaining Wall Use 3
1.5: Advantages of Segmental Retaining Walls 3
1.6: Summary of Changes Incorporated into 3rd Edition 4

SECTION 2: SEGMENTAL RETAINING WALL COMPONENTS 7
2.1: Segmental Retaining Wall Units 8
2.1.1: Dimensions 8
2.1.2: Mix Design, Compressive Strength and Dimensional Tolerances 10
2.1.3: SRW Performance Properties 10
2.1.3.1: Connection Strength between Geosynthetic Reinforcement and SRW Units 11
2.1.3.2: Determination of Shear Strength Between SRW Units 12
2.2: Leveling Pads 13
2.3: Gravel Fill and Drainage Materials 13
2.4: Soils 14
2.4.1: Soil Classifications 15
2.4.2: Soil Shear Strength 15
2.4.2.1: Different Shear Strengths for Saturated Clays 19
2.4.3: Soil Properties Requried for Design of SRWs 20
2.5: Geosynthetic Reinforcement 22
2.5.1: Reinforcement Concepts 23
2.5.2: Long-Term Design Strength 24
2.5.2.1: Determination of the Long-Term Design Strength of the Geosynthetic 24
2.5.3: Soil-Reinforcement Interaction Performance 25
2.5.3.1: Coefficient of Interaction for Pullout 25
2.5.3.2: Coefficient of Direct Sliding 26

SECTION 3: ROLES AND RESPONSIBILITIES ON PROJECTS INVOLVING SRWS 27
3.1: Overview of Roles 27
3.2: Site Civil Engineer Suggested Roles Overview 29
3.3: Geotechnical Engineer Suggested Roles Overview 30
3.4: SRW Design Engineer Suggested Roles Overview 31
3.5: Construction Observation and Testing Suggested Roles Overview 32

SECTION 4: WALL LAYOUT AND PLANNING 33
4.1: Wall Layout Example 33
4.2: Site, Grading, and Utility Plans 34
4.2.1: Location of Retaining Walls 34
4.2.2: Property Lines and Other Space Limitations 34

4.2.3: Utilities 36
4.2.4: Contour Lines 37
4.2.5: Loading Features 37
4.2.6: Miscellaneous Features 37
4.2.7: Scale 38
4.2.8: Additional Information 38
4.3: Retaining Wall Layout 38
4.4: Design 38

SECTION 5: SEGMENTAL RETAINING WALL DESIGN OVERVIEW 43
5.1: Conventional SRW Concepts 44
5.2: Reinforced SRW Concepts 44
5.3: Potential Failure Modes for Segmental Retaining Walls 44
5.3.1: External Stability 46
5.3.2: Internal Stability 46
5.3.3: Facing Stability 46
5.3.4: Internal Compound Stability 46
5.3.5: Geotechnical Concerns 47
5.4: Earth Pressure and Forces 49
5.4.1: Active Earth Pressure Coefficient 51
5.4.2: Failure Surface Orientation, α 51
5.4.3: Interface Friction Angle, δ 52
5.4.4: Horizontal and Vertical Components 52
5.5: Design Height and Embedment 53
5.5.1: Design Height for SRWs 53
5.5.2: Embedment Requirements 53
5.6: Top of Wall Conditions 54
5.6.1: Infinite Slopes 54
5.6.2: Broken Backslopes 54
5.6.3: Surcharge Loading 55
5.6.3.1: Live and Dead Loads 55
5.6.3.2: Modeling as Uniform 55
5.6.3.3: Offset Surcharges 55
5.6.3.4: Line Loads or Point Loads 56
5.6.3.5: Tiers as Surcharges 56
5.7: Water and Drainage 56
5.8: Seismic Analysis 57
5.9: Special Conditions 57
5.9.1: Tall Walls 57
5.9.2: Tiered Walls 58
5.9.3: Sloping Toe Concerns 60
5.9.4: Foundation Stability 60
5.9.5: Global Stability 60
5.10: Recommended Minimum Factors of Safety and Design Criteria 60
5.10.1: Maximum Vertical Spacing of Geogrid 60
5.10.2: Minimum Geogrid Length 61

5.10.3: Maximum Wall Height 61
5.10.4: Factors of Safety and Design Criteria Summary 62

SECTION 6: CONVENTIONAL SEGMENTAL RETAINING WALL DESIGN 63
6.1: Design Asspumptions 63
6.1.1: Coulomb Earth Pressure Theory 63
6.1.2: Loading Assumptions 63
6.1.3: Single- and Multiple-Width SRWs 64
6.2: Minimum Factors of Safety for Stability Analyses 64
6.3: Segmental Unit Properties 64
6.4: External Stability 64
6.4.1: Earth Pressures and Forces 64
6.4.1.1: Top of Wall Geometry for Equivalent Slopes 66
6.4.1.2: External Earth Forces and Locations 68
6.4.2: Weight of Segmental Retaining Wall 69
6.4.3: Base Sliding 69
6.4.4: Overturning 69
6.4.5: Bearing Pressure 71
6.5: Internal Stability 72
6.6: Example Calculations 73

SECTION 7: REINFORCED SOIL SEGMENTAL RETAINING WALL DESIGN 75
7.1: Design Asspumptions 75
7.1.1: Coulomb Earth Pressure Theory 75
7.1.2: Reinforced Zone Width 76
7.1.3: Loading Assumptions 76
7.2: Recommended Factors of Safety and Design Criteria 77
7.2.1: Geogrid Length Requirements 77
7.2.2: Geogrid Vertical Spacing Requirements 77
7.2.3: Geogrid Coverage Requirements 77
7.3: Properties for Reinforced SRW Design 77
7.4: External Stability of Reinforced SRWs 78
7.4.1: Wall Geometry Dimensions for External Analyses 79
7.4.1.1: External Earth Forces and Locations 83
7.4.1.2: Offset Dead Surcharge Loads ($q_{doffset}$) and Geometry for Resisting Equations 84
7.4.1.3: Soil Weights 86
7.4.2: Base Sliding 87
7.4.3: Overturning 88
7.4.3.1: Resisting Moments 88
7.4.3.2: Overturning (Driving) Moments 90
7.4.3.3: Overturning Factor of Safety 90
7.4.4: Bearing Pressures for Geotechnical Foundation Analysis 90
7.5: Internal Stability of Reinforced SRWs 91
7.5.1: Internal Earth Pressures and Failure Plane 93
7.5.1.1: Backslope Geometry for Internal Earth Pressures 93
7.5.1.2: Overall Internal Forces 94

7.5.1.3: Internal Failure Plane 95
7.5.2: Load on Individual Reinforcement Layers 96
7.5.2.1: Determination of Minimum Number of Geogrid Layers 96
7.5.2.2: Contributory Area 96
7.5.2.3: Midpoint of Contributory Area 98
7.5.2.4: Applied Tensile Load of Reinforcement Layers 98
7.5.3: Tensile Overstress of Reinforcement Layers 98
7.5.4: Pullout of Reinforcement 99
7.5.4.1: Anchorage Capacity of Reinforcement 99
7.5.4.2: Pullout Factor of Safety 100
7.5.5: Internal Sliding Failure 100
7.5.5.1: Internal Sliding Forces 100
7.5.5.2: Internal Sliding Resistance 103
7.5.5.3: Factor of Safety Internal Sliding at Each Reinforcement Layer 104
7.6: Local Stability of SRW Units 104
7.6.1: Facing Connection Strength 105
7.6.2: Crest Toppling 107
7.6.3: Offset Surcharge Load Reduction in Facial Calculations 108
7.7: Example Calculations 110

SECTION 8: INTERNAL COMPOUND STABILITY 111
8.1: Model 112
8.2: Unreinforced Section 113
8.3: Reinforced Section 114
8.4: Contribution of the Reinforcement 115
8.5: Contribution of the Facing 116
8.6: Summary 117
8.7: Example Calculations 119

SECTION 9: SEISMIC DESIGN OF SEGMENTAL RETAINING WALLS 121
9.1: Design Assumptions 121
9.1.1: Assumptions 121
9.1.2: Need for Separate Static and Seismic Analysis 121
9.2: Calculation of Earth Forces and Failure Plane 122
9.3: Distribution of Seismic Earth Pressures 125
9.4: Seismic Acceleration Coefficients 125
9.5: Inertial Forces 126
9.6: Surcharge Loads 126
9.7: Conventional Segmental Retaining Walls 127
9.7.1: External Stability 127
9.7.1.1: Base Sliding (Refer to Section 6.4.3) 128
9.7.1.2: Base Overturning (Refer to Section 6.4.4) 129
9.7.1.3: Bearing Pressure (Refer to Section 6.4.5) 129
9.7.2: Internal Stability 130
9.7.2.1: Internal Sliding (Refer to Section 6.5) 130

9.8: Geosynthetic Reinforced Segmental Retaining Walls 130
9.8.1: External Stability 130
9.8.1.1: External Earth Forces and Locations 131
9.8.1.2: Internal Forces and Locations 132
9.8.1.3: Base Sliding 134
9.8.1.4: Overturning 135
9.8.1.5: Bearing Pressure 136
9.8.2: Internal Stability 136
9.8.2.1: Tensile Overstress 139
9.8.2.2: Pullout 139
9.8.2.3: Internal Sliding 139
9.8.2.4: Connection Capacity 141
9.8.2.5: Crest Toppling 141
9.8.3: Internal Compound Stability (see Section 8) 142
9.9: Example Calculation 144

SECTION 10: DRAINAGE DESIGN AND WATER CONSIDERATIONS 145
10.1: Overview of Water Considerations 145
10.2: SRW Drainage Components 145
10.2.1: Gravel Fill (Drainage Aggregate) 146
10.2.2: Drain Pipe 146
10.2.3: Filters (Geotextile or Gravel) 147
10.2.4: Blanket Drain 149
10.2.5: Chimney Drain 150
10.2.6: Drainage Swale 150
10.3: Subsurface Drainage Capacity Design 150
10.3.1: Drains Directly Behind the SRW Units 150
10.3.1.1: Reinforced Soil Walls 150
10.3.1.2: Gravity Walls 152
10.3.2: Drain at the Back of Reinforced Soil Zone 152
10.3.2.1: Flow into the System 152
10.3.2.2: Flow into the Drain 152
10.3.2.3: Outlets 153
10.3.3: Drain at Subgrade and Reinforced Soil Mass Interface 153
10.4: Filtration and Permeability 153
10.4.1: Soil Filtration 153
10.4.2: Geotextile Filtration 155
10.4.3: Soil Permeability 156
10.5: Water Bodies in Front of Walls 156
10.5.1: Foundations 157
10.5.2: Rapid Draw Down 157
10.5.3: Bouyant Soil Weights 158
10.5.4: Reinforced Fill for Waterfront Applications 159
10.5.5: Scour and Erosion 159
10.5.6: Ice Forces in Front of Wall 159

SECTION 11: DESIGN GUIDELINES FOR SITE CIVIL ENGINEER 161
11.1: Wall Layout and Civil Drawings 161
11.2: Surface Drainage Design Considerations Around SRWs 162
11.3: Grading for Surface Drainage Around SRWs 163
11.4: Erosion and Scour Issues 163
11.5: Stormwater Collection–Catch Basin/Drop Structures 164
11.6: Drainage Structure Outlet Pipes Passing through SRW Face 164
11.7: Stormwater Management Ponds 164
11.8: Waterfront Application Walls 165
11.9: Utilities within Reinforced Soil of SRWs 165
11.10: Underground Stormwater Detention Structures and Permeable Pavements 165
11.11: Snow Management 165
11.12: Fencing, Guide Rails, and Traffic Barriers 166

SECTION 12: DESIGN GUIDELINES FOR PROJECT GEOTECHNICAL ENGINEER 167
12.1: Geotechnical Investigations 167
12.1.1: Subsurface Exploration 168
12.1.2: Laboratory Testing 168
12.2: Geotechnical Properties for SRW Design 169
12.2.1: Soil Properties for the SRW Engineer 169
12.2.2: Soil Type Classification 170
12.2.3: Soil Shear Strength 170
12.2.4: Groundwater Data 170
12.2.5: Other Geotechnical Properties 171
12.3: Foundation Evaluations and Recommendations 171
12.3.1: Gravity SRW Bearing Capacity 171
12.3.2: Soil Reinforced SRW Bearing Capacity 173
12.3.2.1: Base Eccentricity 174
12.3.3: Groundwater Effects on Bearing Capacity 174
12.3.4: Foundation Settlement Prediction 176
12.3.5: Improving Foundations 176
12.4: Global Stability Around SRWs 177
12.4.1: Ensuring All Critical Failure Surfaces are Evaluated 177
12.4.2: Effect of Groundwater on Global Stability 178
12.4.3: Improving Slope Stability 179

SECTION 13: CONSTRUCTION OF SEGMENTAL RETAINING WALLS 181
13.1: Construction Drawings and Specifications 181
13.2: Construction Details 181
13.3: Construction Planning 184
13.4: Construction Sequence 184
13.5: Construction Tolerances 184
13.5.1: Dimensional Tolerances for SRW Construction 184
13.5.2: Materials Acceptance 191
13.5.3: Earthwork Monitoring and Testing 191

13.5.4: Geosynthetic Reinforcement....191
13.5.5: Gapping and Cracking of Concrete Units....191
13.5.6: Incidental Movement....191
13.6: Post Construction Activities....192

SECTION 14: SAMPLE SPECIFICATIONS....193
14.1: Material Specification....193
PART 1: GENERAL....194
PART 2: MATERIAL....197
PART 3: CONSTRUCTION....200
PART 4: MEASUREMENT AND PAYMENT....202

APPENDICES....203
Appendix A: Conventional Single Depth SRW....205
Appendix B: Reinforced Soil SRW....215
Appendix C: Determination of Long-Term Design Strength, LTDS of Geosynthetic Soil Reinforcement....263

METRIC CONVERSION TABLE....269

NOTATIONS AND ABBREVIATIONS....271

REFERENCES....277

SECTION 1
INTRODUCTION

Section 1.1: Purpose and Scope of Manual

This design manual (third edition) was produced by the National Concrete Masonry Association (NCMA) to provide a standardized engineering approach for the analysis and design of segmental retaining walls (SRWs). The first edition of the manual was published in 1993 and the second edition was published in 1997 [Ref. 64]. In 1998, a companion manual, *Segmental Retaining Walls—Seismic Design Manual,* was published [Ref. 57]. In 2002, a second companion manual, *Segmental Retaining Wall Drainage Manual* was published [Ref. 65]. This third edition of the Design Manual has incorporated the Drainage Manual and Seismic Design Manual recommendations into one document.

A segmental retaining wall is constructed from dry-stacked units (without mortar) that are usually connected through concrete shear keys or mechanical connectors. SRW units are dry-cast machine produced. A variety of proprietary SRW units are available from NCMA members.

The purpose of this manual is to provide generic design guidelines for segmental retaining walls constructed as gravity structures and as geosynthetically reinforced soil segmental retaining walls. Reinforced SRW systems are composite-facing, mechanically stabilized earth (MSE) retaining wall structures that have unique features and design requirements that are addressed in detail in this design guideline. This manual provides design guidelines and engineering procedures necessary to produce safe, cost effective retaining wall structures. The design methodologies contained in this manual allow the engineer to analyze the influence of all components of the SRW system on wall performance; in addition the manual covers the design considerations associated with surface and subsurface drainage. In addition to subsurface water management, the proper design of surface water control structures and diversion are important design considerations. The guidelines presented in this manual have been developed to assist the designer in reducing the potential for surface or ground water from negatively impacting an SRW.

The theories presented in this manual offer the designer the methods to quantify performance of retaining wall structures built with segmental concrete facing units, geosynthetic reinforcement and soils.

Section 1.2: Organization of the Manual

The organization of the manual is presented below:

Section 1 discusses the history of the development of this manual, the need for the manual, the history and advantages of SRWs, and the scope of the manual.

Section 2 introduces the components of an SRW (i.e., SRW units, leveling pad, geosynthetic reinforcement, reinforced and retained fill, and drainage materials) and their engineering properties. Section 2 also provides a general overview of SRWs, the basic design concepts and the engineering information (i.e., surcharge load, groundwater elevation, etc.) required for design.

Section 3 discusses the roles of parties involved in the design and construction of SRWs.

With the aid of an example, Section 4 provides a step-by-step approach to laying out a retaining wall.

Section 5 provides a general overview of SRWs, the basic design concepts and the engineering information (i.e., surcharge load, groundwater elevation, etc) required for design. A discussion on Coulomb earth pressure theory is also provided in Section 5.

Section 6 presents the design methodology for conventional gravity SRWs (SRWs without geosynthetic reinforcement). The minimum recommended factors of safety for global, external and internal stability are provided as well as the design steps necessary to determine these factors of safety.

Section 7 provides in depth coverage of the design of geosynthetically reinforced SRWs. This section presents an overview of the design methodology and the design assumptions. Recommended minimum factors of safety for the design and design criteria are covered as well. The determination of external, internal, and local facing stability, as well as compound and global stability are covered in this section.

Section 8 describes the internal compound stability method of analysis for geosynthetic reinforced segmental retaining walls.

Section 9 describes a method of analysis and design for conventional (gravity) and geosynthetic reinforced segmental retaining walls under seismic loading conditions.

Section 10 discusses the design of drainage features including the soil and geotextile filter design and evaluation of soil permeability. Subsurface drainage design considerations at the back of the reinforced soil mass in geosynthetic reinforced SRWs and the drain directly behind the SRW units for both conventional and reinforced SRWs are all discussed.

Section 11 discusses the responsibilities of the site civil engineer.

Section 12 discusses the responsibilities of the geotechnical engineer.

Section 13 deals with construction of SRWs and provides guidance on preparation of construction drawings, detailing, and construction tolerances.

Section 14 provides example specifications for a Material (Method) Specification and an End Result (Performance) Specification. The traditional material specification or method specification approach requires that a site specific design be performed by the owner's engineer. The end result specification can be used to solicit proposals from various segmental retaining wall suppliers using a "line and grade" or systems approach.

Appendix A and B present example calculations for the design of both a conventional (gravity) and geosynthetic reinforced SRW.

Appendix C, Determination of Allowable Geosynthetic Design Strength, T_a of Geosynthetic Soil Reinforcement discusses the procedure to determine the allowable geosynthetic design strength (T_a) for SRW design. This procedure has been adapted from the US Department of Transportation – FHWA Publication No. FHWA NHI-00-043 DP 82-1 *Mechanically Stabilized Earth Walls and Reinforced Soil Slopes—Design and Construction Guidelines* [Ref. 58].

References lists the references used in the development of this manual.

Section 1.3: Design Philosophy

The design concepts presented in this manual are based on conventional engineering principles and experience with the design and construction of thousands of SRW structures in North America over the past 20 years [Refs. 30-35, 41-42]. This manual assumes that the designer is familiar with basic soil mechanics and principles of engineering mechanics. The analysis and design of a gravity or reinforced SRW can be carried out in a systematic, step-by-step process using the methodologies presented herein available through the *Design Software for Segmental Retaining Walls*, SRWall (Version 4.0) [Ref. 69] . The computations associated with each step in the design and analysis procedures in this manual lend themselves to implementation within user-friendly computer software.

This manual provides the designer with many options (i.e., drainage systems) to reduce or eliminate the build-up of hydrostatic forces within an SRW. For cases when this objective is not achievable, guidance is provided on the design of SRWs when hydrostatic forces are present. The designer must engineer the SRW and apply the options and design guidance that are appropriate to the specific application.

This manual also provides design standards and engineering guidance to assist the designer in selecting appropriate performance criteria for a project. The manual also identifies key components of a SRW system and their functions, as well as important construction techniques for satisfactory performance in the field. A set of generic specifications are provided to assist the architect/engineer to develop accurate and complete project-specific contract documents.

The design methodologies and other recommendations contained in this manual provide a common basis for the development of design charts and specifications by manufacturers and suppliers of products used in the construction of SRW systems. The benefit of the single "consensus" design approach presented in this manual is greater understanding, confidence, and acceptance of SRW systems by design and construction professionals.

Section 1.4: History of Segmental Retaining Wall Use

SRW designers should appreciate the history of mechanically stabilized earth (MSE) wall design in the United States. MSE walls were introduced in U.S. highway construction in the 1970s. State departments of transportation (DOT) specified walls constructed with granular wall fill soils, performed subsurface investigations along the proposed wall alignment, designed surface water control features, coordinated design and construction of the wall structure with other project features, and provided a high level of construction observation (or inspection). DOTs typically specified MSE walls with a line and grade approach, and wall vendors supplied the design, facing panel elements and soil reinforcement elements to the contractor. The design was, and still is, typically limited to: (i) internal wall stability and (ii) external wall stability, and did not include global stability or surface or subsurface drainage design and detailing. The latter were provided by the DOT, owner or specifier.

Application of MSE walls and slopes was primarily limited to highway works and very large industrial and commercial works until the advent of SRWs in the mid-1980s. SRW applications initiated then and today are primarily used for residential, commercial and industrial applications (though highway applications are growing at a rapid rate).

The historically typical line and grade specification for MSE design is often applied to SRWs for residential, commercial and industrial applications. The design and construction of such projects, however, typically varies significantly from highway projects. The SRW designer should recognize and address these variations.

Unlike DOT projects, private works may have several firms designing different features (e.g., site plan, buildings, foundations, SRWs, landscaping, etc.) of a project. Furthermore, there may be several contractors reporting to a construction manager that are constructing different features (e.g., site grading, buildings, paving, landscaping, SRW, etc.). Design integration and contractor coordination of several features can be troublesome for some projects–particularly when dealing with surface water runoff.

Ideally, the SRW designer is an active member of the design team working with the owner and other design professionals to assure that the final design is well integrated betwee*n all consultants.*

Section 1.5: Advantages of Segmental Retaining Walls

SRWs offer several important advantages over other soil retaining wall systems.

- **Performance:** SRWs are relatively flexible structures that are typically founded on flexible aggregate leveling pad foundations. SRWs are dry-stacked systems that can generally tolerate movement and settlement without causing significant structural distress at the face because the SRW units may move

and adjust relative to each other. This contrasts with more rigid retaining structures such as cast-in-place concrete and conventional mortared masonry walls.

- **Design Flexibility:** SRW units offer the site designer flexibility with respect to retaining wall location, wall layout, height, and constructability. The typical small size and weight of SRW units permits the construction of walls in difficult access locations. SRW units offer the designer the ability to incorporate tight curves or corners at a site and satisfy other complex architectural layouts.
- **Face Drainage:** The dry-stack construction method used in SRW construction permits water to readily drain through the wall face. This "draining" action aids in preventing the development of hydrostatic pressure behind the SRW units.
- **Ease and Rate of Installation:** SRW units have been designed for rapid and easy installation. Many SRW units on the market can be placed by a single construction worker without the aid of construction equipment. The mortarless construction allows installation to proceed quickly. An experienced installation crew of three or four typically erect 300 to 500 sq. ft (91 to 152 sq. m) of wall per day. This minimizes the impact of retaining wall construction on project scheduling and shortens overall site construction time.
- **Economics:** SRWs offer one of the best values in earth retaining wall systems. SRWs are cost-effective, aesthetically pleasing, earth retaining structures that typically offer a twenty-five percent to forty percent cost advantage over conventional cast-in-place concrete retaining walls. Furthermore, SRWs may offer a capital cost advantage over other proprietary retaining wall systems. When all project costs are measured and compared against performance benefits, SRWs are often the best value for construction dollars spent.
- **Durability:** SRW units are manufactured from dry-cast, machine-formed concrete that creates durable and long-lasting retaining wall systems. SRW units are resistant to cracking and do not splinter or decay like treated timbers or railroad ties. Segmental units utilize high compressive strength and low absorption concrete to resist spalling and freeze/thaw effects that has made conventional masonry blocks a durable building product for foundation and retaining walls for many years

  Additionally, the geosynthetic reinforcement used to stabilize the soil behind SRW units is manufactured from specially formulated polymers engineered to resist creep and environmental degradation throughout the design life of the structure. By implementing the design procedures outlined herein and provided in other references, a safe working strength for the geosynthetic reinforcement can be determined for a design life ranging 75 to 100 years.

- **Ecologically Friendly:** Concrete SRW units are an ecologically safe building material. SRW units are manufactured from naturally occurring materials that are in abundant supply and extracted with minimal environmental impact. Chemical preservatives (creosote, nickel/arsenic) used in treated timbers and railroad ties are not required for SRW units.
- **Aesthetics:** SRW units come in a variety of colors, shapes, styles and configurations and therefore provide architects, owners and engineers with a wide choice of aesthetically pleasing wall textures and appearances. The ability to match and complement other building materials such as brick, masonry, and stucco allows SRW units to visually enhance a project. The use of split-face SRW units provides an architectural appearance that is superior to the gray, drab, monotony of conventional cast-in-place concrete retaining walls.
- **Seismic Performance:** The performance of mechanically stabilized earth walls (i.e., SRWs) during seismic events is excellent. Review of the performance of numerous SRW after earthquakes has shown that they are more robust than conventional retaining walls under seismic loading when properly designed for seismic loads.

Section 1.6: Summary of Changes Incorported into 3rd Edition

As discussed in Section 1.1, the third edition of the *Design Manual for Segmental Retaining Walls* incorporates the design recommendations of the *Segmental Retaining Walls Seismic Design Manual* [Ref. 57], *Segmental Retaining Wall Drainage Manual* [Ref. 65] and the second edition of the *Design Manual for Segmental Retaining Walls* [Ref. 64] into one document.

In addition, there are several technical changes that have been made to this third edition of the manual with respect to the previous editions. These changes include the deletion of the hinge height concept, the bulging calculation at the face of the wall, and the serviceability requirements for connection strength between the geosynthetic reinforcement and SRW units. Research over the last decade has demonstrated that the concept of hinge height does not realistically predict the vertical load on an SRW unit within a wall. Friction that develops between the reinforced soil and SRW unit effectively transfer vertical load to the SRW units equivalent to the height of the wall above the unit regardless of hinge height. The bulging calculation presented in the previous editions of the manual does not model the failure mechanism associated with bulging of the SRW. This edition of the manual has replaced the previous bulging calculation with the more rigorous internal compound stability analysis that models the actual failure mechanism when bulging occurs. The serviceability requirements for connection strength have been eliminated from the recommendations provided herein. When following the construction guidelines provided in this manual the connection between the SRW unit and geosynthetic reinforcement is tensioned during construction. This tensioning eliminates the serviceability issue for currently available combinations of SRW units and geosynthetic reinforcements. If in the future more flexible reinforcements are used to build SRWs the serviceability requirement provided in the second edition of the manual may be appropriate.

Finally, research has revealed that the inverted trapezoidal seismic load distribution as found in *Seismic Design Manual for Segmental Retaining Walls* [Ref. 57] is extremely conservative. Current research [Ref. 68] indicates that retaining walls with extensible reinforcement do not behave in the manner described in the *Seismic Design Manual for Segmental Retaining Walls*. Based on this research, a more realistic rectangular load distribution is used in this combined, third edition manual. Additional discussion of this topic can be found in Section 9.

SECTION 2
SEGMENTAL RETAINING WALL COMPONENTS

The major components of conventional and reinforced soil SRWs are shown in Figure 2-1. This section is focused on the mechanical properties and engineering performance of these SRW components.

Conventional gravity SRWs are comprised solely of SRW units, leveling pad, gravel fill, and retained soil (Figure 2-1A). All destabilizing forces must be resisted by the weight of the stacked SRW units and the shearing resistance developed at the top and bottom surface of each unit. The effective width and weight can be increased using a multiple depth SRW system, though this is not fully addressed herein.

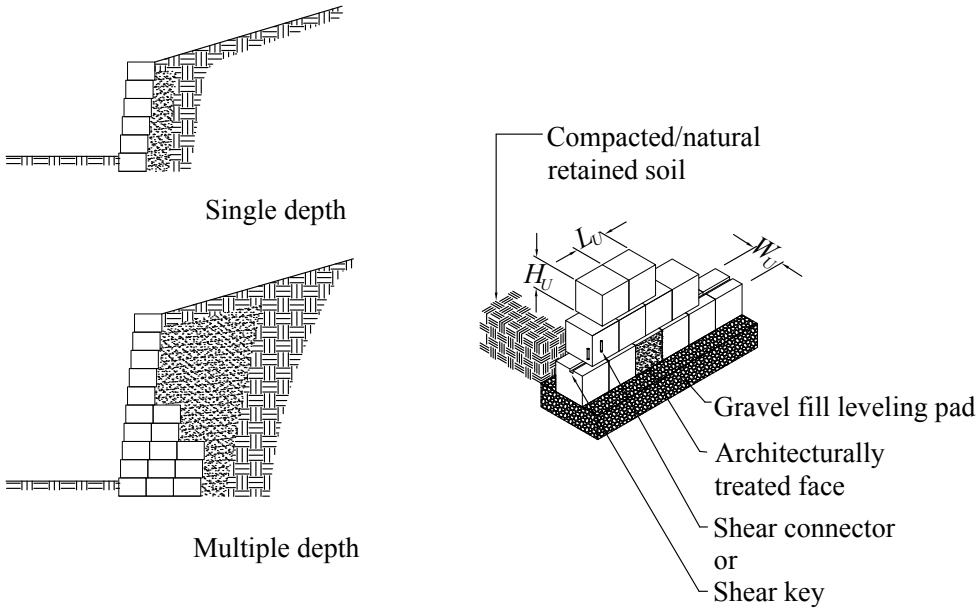

A. Conventional SRW

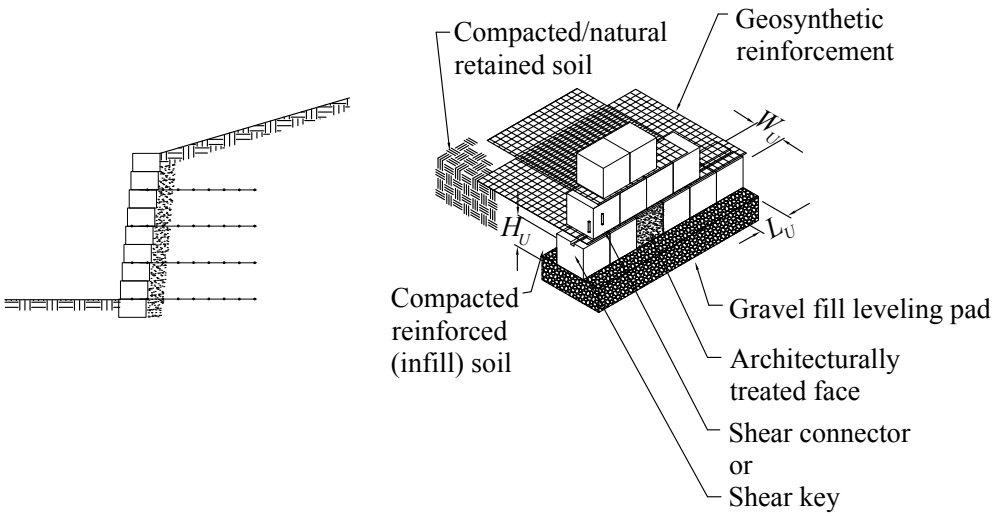

B. Reinforced Soil SRW

Figure 2-1: Segmental Retaining Wall Systems

For reinforced soil SRWs, the units function primarily as a facing system to control the local stability at the front of the structure of the geosynthetically reinforced soil mass (Figure 2-1B).

The description of principal components in conventional gravity and reinforced soil SRW systems shown in Figures 2-1 and 2-2 are:

- **Segmental Retaining Wall Units:** Dry-stacked column of concrete units that create the mass of conventional SRW structures and provide mass and structural stability at the face of reinforced soil SRW structures.
- **Gravel Fill:** Free-draining, coarse grained aggregates placed in the cores and between the SRW units extending 12 in. (305 mm) behind the tail of the units. The gravel fill acts as a compaction aid to reduce horizontal compaction stresses on the back of the SRW units during construction and to facilitate drainage at the face of the wall by intercepting incidental water and thereby relieve hydrostatic pressure or seepage forces. This is not meant to be a primary drainage path for typical applications.
- **Reinforced Soil:** Compacted structural fill placed behind the SRW units to the tail end of the reinforcement. During stability calculations for reinforced soil SRW structures, SRW units and reinforced soils are treated as a single homogeneous zone contributing to the mass and width of the structure to simplify external stability calculations.
- **Retained Soil:** Soil immediately behind the reinforced soil in reinforced soil SRW systems or soil immediately behind the gravel fill or SRW in conventional gravity SRW systems.
- **Foundation Soil:** Soil mass supporting the leveling pad and the reinforced (infill) soil zone of a reinforced soil SRW system.
- **Leveling Pad:** Level surface (gravel or concrete) used to distribute the weight of the dry-stacked column of SRW units over a wider foundation area and to provide a working surface during construction.

Section 2.1: Segmental Retaining Wall Units

The structural integrity of a dry-stacked column of segmental retaining wall units is achieved by incorporating shear connections in the form of shear keys, leading/trailing lips, pins/clips, or through friction. These connection devices increase the shear capacity of the interface between successive courses of SRW units, which are generally stacked in a running bond configuration. Some connectors are also used to control the horizontal setback for successive segmental unit courses and therefore assist in maintaining a constant wall facing batter (ω) (Figure 2-2). Typical facing batter angles are 1° to 15° from vertical. (All wall batter angles are positive when rotated towards the reinforced soils.) The connectors also assist to align and hold geosynthetic reinforcement materials in place.

Segmental units also provide the following:

- **Formwork -** The segmental units provide a construction formwork to place and compact soil in the soil zone immediately behind the units.
- **Facing Stability -** Segmental units provide permanent local support to the vertical or near-vertical soil mass behind the units to prevent soil from ravelling out or eroding. Additionally, the segmental units protect the retained soil zone from erosion due to flowing water or scour from adjacent creeks or streams.
- **Aesthetics -** Segmental units offer architectural treatment and appearance that enhances the environment surrounding the SRW.

Segmental retaining wall units come in a variety of sizes and shapes. The dimensions, unit weight and connection performance must be carefully evaluated during the design of the SRW system.

2.1.1: Dimensions

The physical dimensions of segmental units are defined below as illustrated in Figures 2-1 and 2-2:

- **Height - (H_u)** The vertical dimension of a segmental unit in place, ft (m).

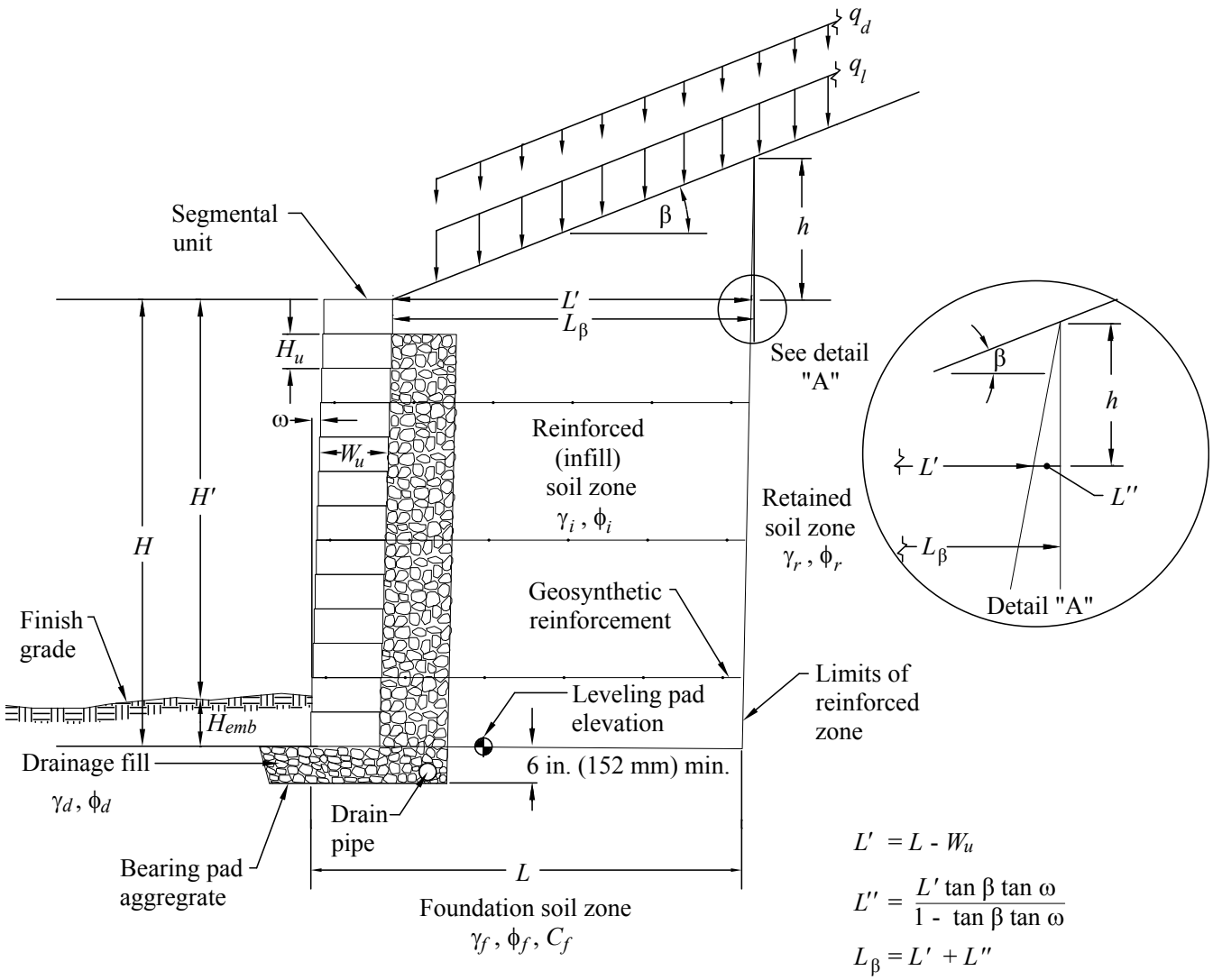

$$L' = L - W_u$$

$$L'' = \frac{L' \tan\beta \tan\omega}{1 - \tan\beta \tan\omega}$$

$$L_\beta = L' + L''$$

$$h = L_\beta \tan\beta$$

H = total height of wall (design height)
H' = exposed height of wall
H_{emb} = wall embedment
h = maximum height of backslope above reinforced zone
L = total length of reinforcement, including facing connection
L' = length of reinforced zone at crest of wall
L_β = horizontal width of reinforced zone at intersection with backslope, β
β = blackslope angle from horizontal at top of wall
ω = angle from vertical due to SRW unit setback, wall inclination
q = uniform surcharge loading
H_u = height of segmental unit
W_u = width of segmental unit
q_d = dead load surcharge
q_l = live load surcharge

Figure 2-2: SRW Geomentry and Soil Zones

- **Length - (L_u)** The horizontal dimension of a segmental unit as viewed while observing a completed wall from the front, ft (m).
- **Width - (W_u)** The horizontal dimension of a segmental unit from front to back. This dimension will appear as a nominal width on a standard cross-section drawing, ft (m).
- **Weight - (γ_u)** The weight per unit volume of segmental units as placed including drainage fill in and between the segmental units, if applicable, pcf (kN/m^3).
- **Setback - (Δ_u)** The horizontal distance (toe to toe) that each SRW unit course is displaced from the course below, in. [Note: Positive distance into infill soils.]
- **Facing Batter - (ω)** The equivalent uniform facing angle that is created by a SRW setback. The facing batter is measured with respect to a vertical line drawn from the toe of the lowermost SRW unit (deg). [Note: Positive inclination into infill soils.]
- **Center of Gravity - (G_u)** The horizontal distance from the front face of a SRW unit to the point of application of the weight the SRW unit including unit fill in a free-body diagram, ft (m). [Note: G_u in vertical direction assumed to be $H_u/2$ for all equations.]

2.1.2: Mix Design, Compressive Strength and Dimensional Tolerances

Recommendations for minimum compressive strength, maximum water absorption, manufacturing tolerances, and finish and appearance of SRW units are contained in ASTM C 1372 *Standard Specification for Dry-Cast Segmental Retaining Wall Units* [Ref. 67]. The job site acceptance or rejection of SRW units can be made on the basis of these physical properties and the requirements for finish and appearance, all of which should be incorporated into the job site specification.

The compressive strength requirements for SRW units in ASTM C 1372 are governed by the durability requirements of a particular application (installation) and/or the stress transfer requirements between successive courses. Historically, the freeze/thaw resistance and durability of concrete masonry is demonstrated through more than 50 years of satisfactory performance in foundation and retaining walls. During the early use of SRW units (early 1990's) however, the freeze/thaw durability of SRW units when exposed to de-icing salts was an issue. Extensive research has been conducted on freeze/thaw durability over the last 20 years. Compressive strength and water absorption are two physical properties of the no-slump concrete used to make SRW units that have been related to freeze/thaw resistance [Ref. 40]. The required values for these properties are intended to provide a durable unit for in field service. The freeze/thaw resistance of segmental retaining wall units is affected by temperature cycles, exposure conditions, and moisture content of the units, and many other factors, [Ref. 49]. ASTM C 1372 provides requirements for freeze/thaw durability in geographic areas where repeated freezing and thawing under saturated conditions occur. The drainage details presented in this manual will also help to minimize the moisture content of the units by allowing water to drain freely to the discharge pipe at the base of the wall. In some weathering regions and for some exposure conditions (i.e., along a highway where units may be in contact with de-icing salts), higher standards than the minimum value presented in ASTM C 1372 may be necessary to provide additional durability resistance in aggressive environments.

ASTM C 1372 indicates the manufacturing tolerance on any molded dimension of an SRW unit is ± $^1/_8$ in. (3 mm).

2.1.3: SRW Performance Properties

The unique shape of each SRW unit directly affects its ability to function in retaining wall applications. Most significant is the mechanism utilized to transfer stress to the units above and below it.

The various methods to create shear connections between successive vertical courses of segmental units are:

- **Built-in mechanical concrete interlock -** These SRW units have a positive, built-in mechanical interlock that is an integral part of the segmental unit shape. Examples of this positive mechanical interlock are shear keys and leading/trailing lips.

- **Mechanical connectors -** The specially manufactured connectors that link successive vertical courses of units together may be designed as a mechanical interlock to provide additional shear capacity, and are also used to assist with unit alignment and control the wall facing batter during wall construction. Examples of mechanical connectors are pins, clips, or wedges.
- **Frictional interface -** This type of SRW unit develops shear capacity through interface friction.

These principal methods of connection can be augmented with unit fill. SRW unit cavities filled with gravel fill can develop significant shear resistance through gravel to gravel and gravel to unit interlock.

The shear capacity (V_u) between segmental courses generated by these connections is an important parameter in the stability analysis of both conventional and reinforced soil SRWs. The magnitude of V_u will be a function of wall height, unit type, infill, and in reinforced soil SRWs, the properties of any geosynthetic reinforcement layer that may be present between courses of SRW units. Similarly, the connection strength (T_{conn}) developed between the SRW unit and geosynthetic reinforcement may control the design of reinforced soil SRWs. Appropriate values for V_u and T_{conn} used in design can only be established from the results of large-scale testing of the connection detail in SRW systems (ASTM D 6638 *Standard Test Method for Determining the Connection Strength Between Geosynthetics Reinforcement and Segmental Concrete Units* [Ref. 70] and ASTM D 6916 *Standard Test Method for Determining the Shear Strength Between Segmental Concrete Units* [Ref. 71]).

The magnitude of V_u and T_{conn} calculated from full-scale test results are compared to the actual applied force for each specific SRW unit elevation or geosynthetic reinforcement layer during design computations. The shear capacity and connection strength must be greater than the applied loads by the minimum required safety factors.

2.1.3.1: Connection Strength between Geosynthetic Reinforcement and SRW Units

The procedure to quantify the connection strength between a geosynthetic and SRW units is given in ASTM D 6638 *Standard Test Method for Determining the Connection Strength Between Geosynthetics Reinforcement and Segmental Concrete Units*.

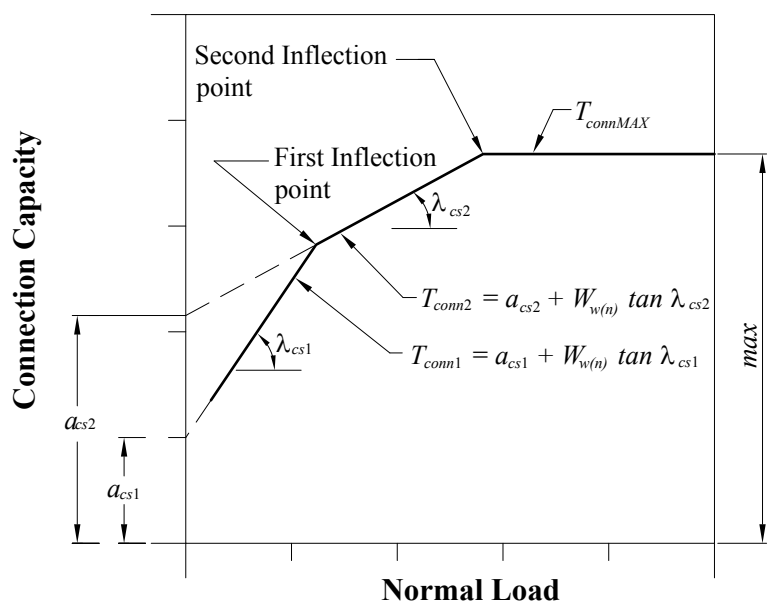

Figure 2-3: Typical Connection Strength Properties for SRW Unit and Geosynthetic Reinforcement

The purpose of a test performed in accordance with ASTM D 6638 is to establish the connection strength of segmental concrete units to a geosynthetic reinforcement layer for a given surcharge pressure applied normal to the connection interface. A series of tests are conducted to establish a relationship between facing connection strength and height of stacked segmental units defined by a Mohr-Coulomb failure criterion over a representative range of surcharge pressures. The surcharge pressures used in the test must cover the range of normal interface pressures anticipated in the proposed structure. This test is intended to be a performance test, since variations in segmental unit shape and geosynthetic strength/configuration will affect the results. Equivalent Mohr-Coulomb failure criteria parameters a_{cs} and λ_{cs} determined through full-scale testing can then be used by the designer to calculate the ultimate connection strength over the full face height of the wall. Typical relationships for connection strength performance are illustrated in Figure 2-3.

2.1.3.2: Determination of Shear Strength Between SRW Units

The procedure to quantify the shear strength between SRW units is given in ASTM D 6916 *Standard Test Method for Determining the Shear Strength Between Segmental Concrete Units*. The purpose of a test performed in accordance with ASTM D 6916 is to measure the shear strength between segmental concrete units for a given pressure applied normal to the unit interface. A series of tests are carried out to establish a relationship between interface shear strength and height of stacked segmental units defined by a Mohr-Coulomb failure criterion over a representative range of normal loads. The normal pressures used in the test must cover the range of normal interface pressures anticipated in the proposed structure. This test is intended to be a performance test, since variations in segmental unit shape and geosynthetic strength/configuration will affect the results. Equivalent Mohr-Coulomb strength parameters a_u and λ_u determined through full-scale testing can then be used by the designer to calculate the shear strength over the full face height of the wall. Typical relationships for shear capacity performance are illustrated in Figure 2-4.

The full scale performance test described in ASTM D 6916 is meant to provide shear capacity for segmental units with and without geosynthetic reinforcement. The results of this testing is directly applicable to the analysis and design of both conventional and soil-reinforced SRWs.

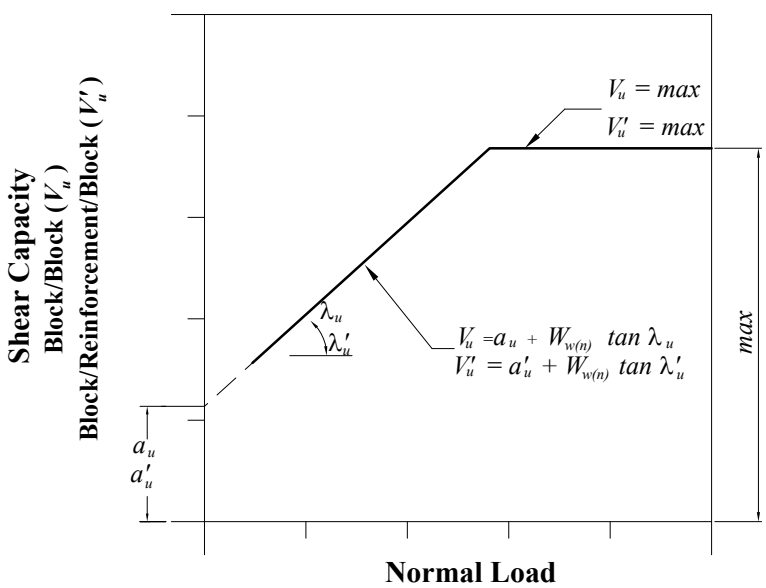

Figure 2-4: Typical Shear Capacity Performance Properties for SRW Unit and Geosynthetic Reinforcement

Section 2.2: Leveling Pads

A compacted aggregate leveling pad is recommended for conventional and reinforced soil SRW structures (Figures 2-1 A and B). The purpose of a leveling pad is to provide a level surface to facilitate placement of the first course of units. Unreinforced concrete may also be used as a leveling pad.

The compacted granular leveling pad should be constructed using GP, GW, SP or SW (see Table 2-2) soil types for optimum stress distribution. The leveling pad should be densely compacted. Alternatively, thin/weak concrete leveling courses may be poured above the compacted leveling pad to speed construction. The leveling pad should not be less than 6 in. (152 mm) thick. The leveling pad should extend laterally at least a distance 6 in. (152 mm) from the toe and heel of the lowermost SRW unit.

In situations where gravity flow of the wall underdrain is unattainable, the leveling pad may be constructed of a densely-graded, impermeable soil to preclude saturation; the drain pipe is then located at the toe of wall above the finish grade.

Section 2.3: Gravel Fill and Drainage Materials

Whenever possible water should be directed away from SRWs, however, when water does reach a SRW, proper drainage components should be provided to avoid erosion, migration of fines, and hydrostatic pressure on the wall. Drainage features of the SRW will depend on site specific groundwater conditions. The engineer that designs the wall has the responsibility of providing adequate drainage features to collect and evacuate water that may potentially seep at the wall. The civil site engineer is typically responsible for the design of surface drainage structures above and behind the wall and the geotechnical engineer is typically responsible for foundation preparation and subsurface drainage beneath a wall. Section 10 addresses in detail the drainage features and materials required for SRW design while the basic drainage components directly within or around SRWs are introduced in the following discussion.

The drainage features that form part of the SRW design are as follows:

- Gravel fill (formerly known as the drainage aggregate) 12 in. (305 mm) thick should be provided behind the SRW units (see Figure 2-2) regardless of the unit type. The recommended gradation requirements for the gravel fill are addressed in Section 2.4.3.

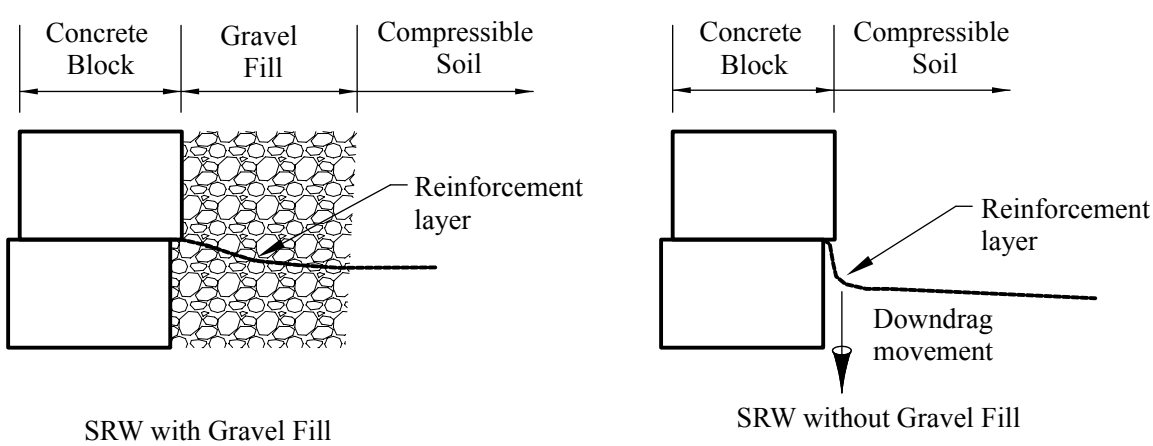

Figure 2-5: SRW with and without Gravel Fill

- Drain pipe;
- Geotextile filter/separator;
- Blanket drain;
- Chimney drain, and;
- Drainage swale.

Except for the gravel fill, the decision to employ one or all of the drainage features mentioned will depend on site specific groundwater conditions, or, if a specifying agency requires it regardless of the site conditions.

The gravel fill, which should be part of all SRW designs, fulfills the following roles:

- Facilitates compaction of fill directly behind the SRW units.
- Prevents the build up of hydrostatic pressures from incidental water behind the face of the wall.
- Prevents retained soils from washing through the face of the wall.
- Minimizes *"downdrag movement"* behind the modular concrete block (Figure 2-5). These forces may contribute to the shearing of reinforcement elements directly behind the concrete block.

Section 2.4: Soils

The soil materials within and adjacent to a SRW will typically exert the greatest influence on the final design of the structure. For a given wall height and geometry, the properties of the retained soils will often control the choice of a conventional SRW or a reinforced soil SRW system. The soils selected for placement immediately behind the facing units in reinforced soil SRW construction are a principal structural component of these systems. The design challenge is to match the soil properties, segmental unit properties and geosynthetic reinforcement to obtain an optimized design.

This section of the manual provides an overview of some of the soil materials and properties used in the design and construction of SRWs. A more thorough discussion of geotechnical engineering requirements is provided in Section 3.3. The reader is directed to the list of references for textbooks on soil mechanics principles [Refs. 8, 17, 20, 23-25] for a more complete explanation and details on soil properties and behavior.

A key economic advantage of SRW systems is that on-site soils can usually be used. This minimizes the costs associated with importing fill materials and/or removing excavated materials. Provided that groundwater conditions at a site are controlled by the recommendations given earlier in the manual, a wide variety of soil types become candidate materials for the infill soil in the reinforced soil zone.

For example, while cohesionless free draining materials (less than 10% fines) are preferred, soils with low plastic fines (i.e., CL, ML, SM, SC with PI $\leq$ 20) may be used for SRW construction provided the following four additional design criteria are implemented:

- Proper internal drainage is installed (Section 2.3).
- Only soils with low to moderate frost heave potential are utilized, see Table 2-1.
- The cohesive shear strength parameter (c)**,** for the reinforced fill**,** is ignored for stability analysis.
- The final design is checked by a qualified geotechnical engineer to ensure that the use of cohesive soils does not result in unacceptable time-dependent movement of the SRW system.

The advantage of granular soil fills are:

- Easier to place and compact.
- Higher permeability which assists drainage.
- Greater shear strength, which reduces applied stress.
- Settlement of granular soils happens much more quickly than fine grained soils.
- Generally less susceptible to creep.

Table 2-1: Frost Susceptibility of Soils [Refs. 51, 52]

Frost Heave Potential	Soil Characteristics
High	SM, ML, OL and CL with PI<12
Moderate	GM, GC, CL with PI>12, CH, OH, SC
Low	GW, GP, SW, SP and PT
NOTE: MH, CH, OH, OL, and Peat Soil Types not recommended for SRW construction.	

2.4.1: Soil Classification

The Unified Soil Classification System (USCS) is commonly used to classify soils and is based on a dual letter system. The advantage of the system is that soils falling into a classification group can be expected to have similar engineering properties [Ref. 28]. Classification can often be based on visual inspection and/or from the results of a number of relatively simple laboratory tests.

There are four main divisions in the USCS:

- **COARSE-GRAINED** soils identified as gravel (G) or sand (S) are classified on the basis of grain size distribution recognizing that the properties of these materials are not influenced by moisture content. These materials have less than 50% by weight of the sample passing the #200 sieve (0.75mm particle diameter).
- **FINE-GRAINED** soils identified as silts (M) or clay (C) are classified on the basis of particle size and plasticity (defined by Atterberg Limits) recognizing that properties of these soils are influenced by moisture content. These materials have greater than 50% by weight of the sample passing the #200 sieve (0.75 mm).
- **ORGANIC** soils (O) are those soils whose solid constituents consist predominantly of vegetable matter in various stages of decomposition.
- **PEAT** (PT) soils are organic soils which have high natural water content (50 to 2,000 %), high void ratio (normally 5-15 but may be as high as 25), and large compressibility.

The Unified Soil Classification System is illustrated in Table 2-2 and 2-3. Table 2-4 shows typical soil groups and their properties as they relate to engineered fills. Table 2-1 shows frost susceptibility of soils.

2.4.2: Soil Shear Strength

The conventional approach in geotechnical engineering is to describe the shear strength of a soil using a Mohr-Coulomb failure criteria. The Mohr-Coulomb failure criteria relates the normal stress acting on an internal soil failure plane to the peak shearing resistance that is available along that surface. The shear strength (τ) is expressed as:

$$\tau = c + \sigma_n \tan \phi \qquad \text{[Eq. 2-1]}$$

and plots as a straight line on a τ - σ_n diagram (Figure 2-6). The term c is the intrinsic cohesion of the soil sample that is independent of normal stress (σ_n) and tan ö is the coefficient of peak friction. The convention in geotechnical engineering is to describe the frictional part of the peak soil shear strength by the peak internal friction angle (ϕ) measured in degrees. This angle is the slope of the failure envelope plotted on Figure 2-6.

In order for a Mohr-Coulomb model to be accurate, the normal stress must be the effective normal stress (σ'_n) acting on the failure plane. The effective normal stress is the total normal stress less the pore water pressure (u) acting at same location, hence:

$$\sigma'_n = \sigma_n - u \qquad \text{[Eq. 2-2]}$$

Table 2-2: USCS Chart, Classification Using Laboratory Tests (ASTM D 2487)

Criteria for Assigning Group Symbols and Group Names Using Laboratory Tests				Soil Classification	
				Group Symbol	Group Name
Coarse-grained soils – > 50% retained on No. 200 sieve	Gravels – > 50% of coarse fraction retained on No. 4 sieve	Clean gravels – < 5% fines	$C_u \geq 4$ and $1 \leq C_c \leq 3$	GW	Well-graded gravel
			$C_u < 4$ and/or $1 > C_c > 3$	GP	Poorly graded gravel
		Gravels with fines – > 12% fines	Fines classify as ML or MH	GM	Silty gravel
			Fines classify as CL or CH	GC	Clayey gravel
	Sands – > 50% of coarse fraction passes No. 4 sieve	Clean sands – < 5% fines	$C_u \geq 6$ and $1 \leq C_c \leq 3$	SW	Well-graded sand
			$C_u < 6$ and/or $1 > C_c > 3$	SP	Poorly graded sand
		Sands with fines – > 12% fines	Fines classify as ML or MH	SM	Silty sand
			Fines classify as CL or CH	SC	Clayey sand
Fine-grained soils – ≥ 50% passing No. 200 sieve	Silts and clays – liquid limit < 50	Inorganic	PI > 7 and plots on or above "A" line	CL	Lean clay
			PI < 4 or plots below "A" line	ML	Silt
		Organic – $LL_{oven\ dried}$ / $LL_{not\ dried} < 0.75$	PI ≥ 4 and plots on or above "A" line	OL	Organic clay
			PI < 4 or plots below "A" line	OL	Organic silt
	Silts and clays – liquid limit ≥ 50	Inorganic	PI plots on or above "A" line	CH	Fat clay
			PI plots below "A" line	MH	Elastic silt
		Organic – $LL_{oven\ dried}$ / $LL_{not\ dried} < 0.75$	Plots on or above "A" line	OH	Organic clay
			Plots below "A" line	OH	Organic silt
Highly organic soils	Primarily organic matter, dark in color, and organic odor			PT	Peat

Table 2-3: USCS Soil Classification Chart [ref. 17, 28]

Criteria for Assigning Group Symbols and Group Names Using Laboratory Tests				Soil Classification	
				Group Symbol	**Typical Names**
Coarse-grained Soils – More than half of material is larger than No. 200 sieve size (No. 200 sieve size is about the smallest particle visible to the naked eye)	Gravels – > 50% of coarse fraction retained on No. 4 sieve (~ ¼-in. (6.35 mm) size)	Clean Gravels – little or no fines	Wide range in grain size and substantial amounts of all intermediate particle sizes.	GW	Well-graded gravels, gravel-sand mixtures, little or no fines
			Predominantly one size or a range of sizes with some intermediate sizes missing.	GP	Poorly graded gravels, gravel-sand mixtures little or no fines
		Gravels with fines – appreciable amount of fines	Nonplastic fines (for identification procedures see ML below)	GM	Silty gravels, poorly graded gravel–sand-silt mixture
			Plastic fines (for identification procedures see CL below)	GC	Clayey gravels, poorly graded gravel–sand-clay mixture
	Sands – > 50% of coarse fraction passes No. 4 sieve (~¼-in. (6.35 mm) size)	Clean sands – little or no fines	Wide range in grain sizes and substantial amounts of all intermediate particle sizes.	SW	Well-graded sands, gravely sands, little or no fines
			Predominantly one size or a range of sizes with some intermediate sizes missing.	SP	Poorly graded sands, gravelly sands, little or no fines
		Sands with fines-appreciable amount of fines	Nonplastic fines (for identification procedures see ML below)	SM	Silty sands, poorly graded sand-silt mixtures
			Plastic fines (for identification procedures see CL below)	SC	Clayey sands, poorly graded sand-clay mixtures

	Identification Procedures on Fraction Smaller than # 40 Sieve Size					
		Dry Strength (Crushing Caracteristics)	**Dilatancy** (Reaction to Shaking)	**Toughness** (Consistency near PL)		
Fine-grained Soils – More than half of material is smaller than No. 200 sieve size (No. 200 sieve size is about the smallest particle visible to the naked eye)	Silts and Clays – Liquid limit < 50	None to slight	Quick to slow	None	ML	Inorganic silts and very fine sands, rock flour, silty or clayey fine sands with slight plasticity
		Medium to high	None to very slow	Medium	CL	Inorganic clays of low to medium plasticity, gravelly clays, sandy clays, silty clays, lean clays.
		Slight to medium	Slow	Slight	OL	Organic silts and organic silt-clays of low plasticity
	Silts and Clays – Liquid limit ≥ 50	Slight to medium	Slow to none	Slight to medium	MH	Inorganic silts, micaceous or diatomaceous fine sandy or silty soils, elastic silts
		High to very high	None	High	CH	Inorganic clays of high plasticity fat clays
		Medium to high	None to very slow	Slight to medium	OH	Organic clays of medium to high plasticity
Highly organic soils	Readily identified by color, odor, spongy feel and frequently by fibrous texture.				PT	Peat and other highly organic soils

Table 2-4: Engineering Properties of Soils [Ref.17, 28]

Typical Names of Soil Groups	USCS Group Symbols	Permeability when Compacted	Shearing Strength when Compacted and Saturated	Compressibility when Compacted and Saturated	Workability as a Construction Material
Well-graded gravels, gravel-sand mixtures, little or no fines	GW	pervious	excellent	negligible	excellent
Poorly graded gravels, gravel-sand mixtures, little or no fines	GP	very pervious	good	negligible	good
Silty gravels, poorly graded gravel-sand-silt mixtures	GM	semipervious to impervious	good	negligible	good
Clayey gravels, poorly graded gravel-sand-clay mixtures	GC	impervious	good to fair	very low	good
Well-graded sands, gravelly sands, little or no fines	SW	pervious	excellent	negligible	excellent
Poorly graded sands, gravelly sands, little or no fines	SP	pervious	good	very low	fair
Silty sands, poorly graded sand-silt mixtures	SM	semipervious to impervious	good	low	fair
Clayey sands, poorly graded sand-clay mixtures	SC	impervious	good to fair	low	good
Inorganic silts and very fine sands, rock flour, silty or clayey fine sands with slight plasticity	ML	semipervious to impervious	fair	medium	fair
Inorganic clays of low to medium plasticity, gravelly clays, sandy clays, silty clays, lean clays	CL	impervious	fair	medium	good to fair

For routine structures in which the groundwater table is not present within a depth of 66% of the height of the wall below the footing, or where significant groundwater flow into the reinforced zone is not expected, the distinction between effective and total stresses is not required (i.e., $u = 0$) and the terms may be used interchangeably. If porewater pressures are present in the analysis, the designer should engage a qualified geotechnical engineer who is familiar with the site conditions to perform analysis and design calculations and to select appropriate drainage systems (see Section 2.3).

The values for c and ϕ should be determined from the results of direct shear tests (ASTM D 3080 [Ref. 72], AASHTO T-236 [Ref. 101]) for granular soils or standard triaxial compression tests (ASTM D 4767 [Ref. 73], AASHTO T-296 [Ref. 102], and AASHTO T-297 [Ref. 103]) for granular and cohesive soils carried out using normal pressures that are representative of site conditions.

Note that in this manual the soil shear strength parameters used in design are peak strength values and are not reduced by application of a reduction factor nor related to the critical void ratio.

Testing of site specific soils is recommended for definition of strength parameters for final design. In the absence of project specific soils testing, the shear strength parameters may be estimated for preliminary design purposes. Typical ranges of peak shear strength values for a variety of compacted soils are given in Table 2-5.

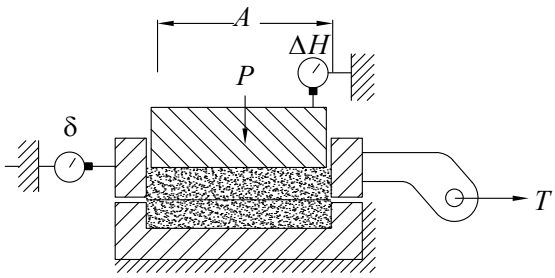

Direct Shear Test Appratus

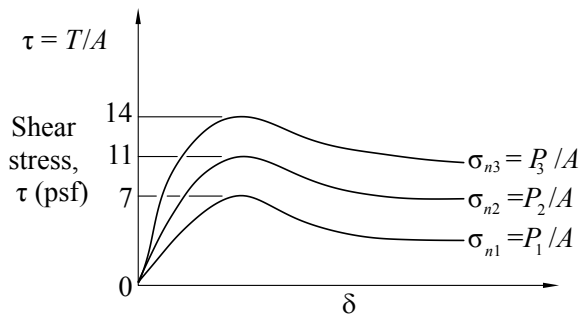

Deformation δ
Shear Stress Versus Deformation

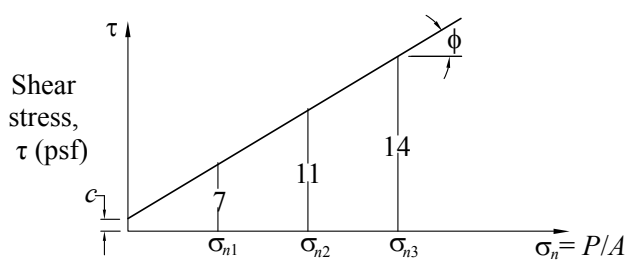

Normal Stress (psf)
Mohr - Coulomb Diagram

Figure 2-6: Shear Strength of Soils

2.4.2.1: Different Shear Strengths for Saturated Clays

There may be SRW project sites where the water is present within a depth of 0.66*H* below the leveling pad or the water table rises to or is present above the leveling pad on either a temporary or permanent basis. Under these conditions, the wall designer should evaluate if it is necessary to consider design cases where the soil conditions are either drained or undrained. This is especially important when saturated clay foundation soils, reinforced fills, or retained fills comprise the site soils (although the use of clay soils for reinforced fill is highly discouraged, especially if water is present).

Drained strength of the soil is the strength of the soil that results when the soil is loaded at a slow enough rate that pore pressures, induced by an applied load, are able to dissipate or drain. Pore pressures dissipate very quickly in free draining materials and very slowly in clay soils or in some other soils that are not free draining (Percentage passing #200 sieve, $P_{200} > 5\%$).

Table 2-5: Summary of Friction Angle Data for Use in Preliminary Design (Modified from Ref. 17)

Classification	Friction Angle
Clay (nonplastic)	24 - 28°
Silt (nonplastic)	26 - 30°
Uniform Fine to Medium Sand	28 to 32°
Well-Graded Sand	30 - 34°
Sand and Medium Gravel	32 - 36°

Undrained strength of the soil is the strength of the soil that occurs when the soil is loaded at a rate faster compared to the rate required to attain drained conditions and a drained shear strength. Such conditions are referred to as undrained conditions. Undrained conditions are not encountered in free draining soils because pore pressures dissipate or drain immediately as a load is applied. In soils that are not free draining, the pore pressures may not dissipate or drain at a rate fast enough to attain a drained condition.

There are three different shear strengths for saturated clay soils:

- Consolidated Drained shear strength (CD shear strength)
- Consolidated Undained shear strength (CU shear strength)
- Unconsolidated Undrained shear strength (UU shear strength)

The CD strength of a saturated clay soil is obtained from a CD triaxial shear strength test in which the soil sample is consolidated under a confining pressure surrounding the soil that is similar in magnitude to that which the soil is expected to be subjected to in-situ. After the pore pressures in the soil generated by the applied confining pressure have dissipated, the soil sample is considered to be consolidated. The sample is then loaded axially at a slow enough rate, which allows the pore pressures generated by the applied axial load sufficient time to dissipate or drain until the sample fails. As such, the CD test sample is consolidated prior to loading and sheared under drained conditions.

The CU strength of a saturated clay soil is obtained from a CU triaxial shear test in which the soil sample is first consolidated as with the CD test. The sample is loaded axially to failure without allowing the pore pressures generated by the applied axial load to dissipate or drain. As such, the CU test sample is consolidated prior to loading and sheared under undrained conditions.

The UU strength of a saturated clay soil is obtained from a UU triaxial shear test or from an unconfined compression test. In a UU test, a confining pressure is applied to the soil sample, as with a CD and CU test, but the pore pressures generated by the confining pressure are not allowed to dissipate or drain. The sample is then loaded axially to failure without allowing the pore pressures generated by the applied axial load to dissipate or drain, as for the CU test. As such, the UU test sample is unconsolidated prior to loading and sheared under undrained conditions. The unconfined compression test is a simple form of the UU test where the confining pressure is not applied to the sample and the sample is loaded axially as for the CU and UU tests.

The determination of the consolidated drained, consolidated undrained, and unconsolidated undrained shear strength of the soils for a project is typically the responsibility of the project geotechnical engineer.

2.4.3: Soil Properties Required for Design of SRWs

The principal soil components associated with the analysis and design of SRW systems are summarized at the beginning of this chapter. Prior to stability calculations, representative soil properties must be assigned to each zone [i.e., reinforced (infill) soil, retained soil, foundation soils, and gravel fill and aggregate leveling pad]. Each soil zone material must be characterized by a peak friction angle (ϕ), cohesion term (c), and representative bulk unit weight defined as the moist unit weight per unit volume of sample (γ). The cohesion term, however, for all representative

soils, with the exception of the foundation soils, is ignored for design. In the long term, fine grained soils will behave as a purely frictional material, thus, cohesion is not used in the design of the reinforced and retained soil zones.

Generally, peak effective stress parameters are appropriate for the design of conventional gravity and reinforced SRW structures. The following table summarizes the minimum soil parameters required prior to the design of each wall section at a project site:

Soil Type	γ(pcf (kN/m^3))	ϕ(deg)	c (psf (kPa))
Reinforced (Infill)	γ_c	ϕ_i	NA
Retained	γ_r	ϕ_r	NA
Gravel fill	γ_d	ϕ_d	NA
Foundation	γ_f	ϕ_f	c_f

Suggested gradation requirements for the reinforced (infill) soil in SRWs are:

Sieve Size	Percent Passing
1 in. (25 mm)	100*
No. 4	100 - 20
No. 40	0 - 60
No. 200	0 - 35

* The maximum size should be limited to 1.0 in. (25 mm) for geosynthetic reinforced soil SRW unless tests have been or will be performed to evaluate potential strength reduction in the geosynthetic due to installation damage (Section 2.5.2.1). The plasticity of the fine fraction of the reinforced (infill) soil should be less than 20 (PI < 20). *Note: See discussion in Sections 5.9.1 and 10 for different requirements for different SRW applications.*

Suggested gradation requirements for the gravel fill (Section 2.3.1) in SRWs are:

Sieve Size	Percent Passing
1 in. (25 mm)	100
3/4 in. (19 mm)	75 - 100
No. 4	0 - 60
No. 40	0 - 50
No. 200	0 - 5

Definition of total and effective shear stress strength properties becomes more important as the percent passing No. 200 sieve increases. Likewise, drainage and filtration become more critical.

Granular soils are recommended for the reinforced (infill) soil for SRWs because; these soils are easier to place and compact than fine grained soils; have higher permeability than fine grained soils, which assists in drainage; have greater shear strength than fine grained soils; and are generally less susceptible to creep.

Fine grained soils (greater than 50% fines) with low plasticity (i.e., SC, ML, CL with PI ≤ 20) may be used for SRW construction. If fine grained soils are to be considered for the reinforced soil a geotechnical engineer should be involved with the design to ensure that the use of the fine grained soil does not result in unacceptable time-dependent movement of the SRW system. Special attention to internal and surface drainage is critical.

Finally, compaction of the fill materials is an important component of the SRW construction. Compaction of the reinforced zone is critical to the stability of the overall structure. The following recommendations should be followed to ensure the proper selection, placement and compaction of the soil mass:

Reinforced Zone

- Backfill lift thickness must be limited to the height of the concrete block, or a maximum of 8 in. (203 mm).
- Large compaction equipment must not be used within 3 ft (1 m) of the face of the wall. Smaller, hand-operated equipment can be used at the face of the retaining wall.
- Project compaction requirements must be met. The requirement is usually a percentage (95% to 98%) of the Standard Proctor dry density of the material and is set by the SRW design engineer. Testing of the compacted fill must be carried out at regular intervals.

Retained Zone and Top-of-Wall Embankments

- It is a popular misconception that the soil behind and above the reinforced zone can consist of soil that cannot be placed anywhere else on the site. Since these areas contribute to the overall stability of the structure, the same care must be taken in the choice, placement and compaction of the soil adjacent to the reinforced zone.
- Lift thickness must not exceed a maximum of 8 to 12 in. (203 to 305 mm)
- Project compaction requirements must be met.

Foundation

- Although the preparation and approval of the foundation is the responsibility of the geotechnical engineer, the retaining wall designer must be confident that the foundation will support the SRW.

Section 13, *Construction of Segmental Retaining Walls*, covers in detail many of the directives mentioned above.

Section 2.5: Geosynthetic Reinforcement

For reinforced soil SRWs, geosynthetic reinforcement is placed in horizontal layers to unify the mass of the composite SRW structure and thereby increase the resistance of the system to destabilizing forces generated by retained soils and surcharge loads. As mentioned previously, the mass of soil that is reinforced in this manner is called the reinforced (infill) soil zone. The NCMA design methodology uses Coulomb earth pressure theory to model the forces acting on conventional and soil reinforced SRWs. A detailed discussion of Coulomb earth pressure theory can be found in Section 5 of this manual.

To create the composite structure the reinforcement layers must be of sufficient number, possess adequate tensile strength, and develop sufficient anchorage capacity to hold the composite mass (reinforced soil zone) together. A "tied-back wedge model" is used in this manual to analyze the reinforced soil mass for internal stability. In this model, the geosynthetic reinforcement layers are assumed to provide a tensile force to resist the outward movement of the reinforced soil wedge IJK illustrated in Figure 2-7. The orientation of the plane defining the limits of the failure wedge behind the wall facing is defined by angle α_i and calculated using Equation 5-5. The area within the reinforced soil zone beyond the failure wedge defined by IJK in Figure 2-7 is designated the anchorage zone for geosynthetic reinforcement.

Calculation of α_i using Equation 5-5 is consistent with the Coulomb wedge theory adopted in this manual to calculate active earth pressures. The most common failure surface used in tied-back wedge models is the theoretical Rankine surface (Equation 5-6) [Refs. 19, 36], which yields greater α_i angles than Equation 5-5. The results of instrumented geosynthetic reinforced soil retaining walls show that the location of the potential failure surface propagating up into the reinforced soil zone from the heel of the bottom SRW unit may be planar, log spiral or bilinear in shape and falls within the failure plane predicted using Equation 5-5 [Refs. 33, 37, 39 and 43]. These design guidelines, however, have conservatively used the Coulomb failure plane for internal stability calculations. The influence of α_i on reinforcement lengths is typically limited to the topmost layers in the reinforced soil mass. Lower layers will have longer anchorage lengths and greater overburden pressures, thus they will not need to be extended past the minimum uniform reinforcement length required to satisfy external stability requirements.

2.5.1: Reinforcement Concepts

A reinforced soil mass is somewhat analogous to reinforced concrete in that the mechanical properties of the mass are improved by reinforcement placed parallel to the principal strain direction to compensate for soil's lack of tensile resistance. The improved tensile properties are a result of the interaction between the reinforcement and the soil. The composite material has the following characteristics:

- Stress transfer between the soil and reinforcement takes place continuously along the reinforcement.
- Reinforcements are distributed throughout the soil mass with a degree of regularity and must not be localized.

Stresses are transferred between soil and reinforcement by friction and/or passive resistance depending on reinforcement geometry. Friction develops at locations where there is a relative shear displacement and corresponding shear stress between the soil and reinforcement surface. Examples of such reinforcing elements are longitudinal bars in geogrids, and geotextiles.

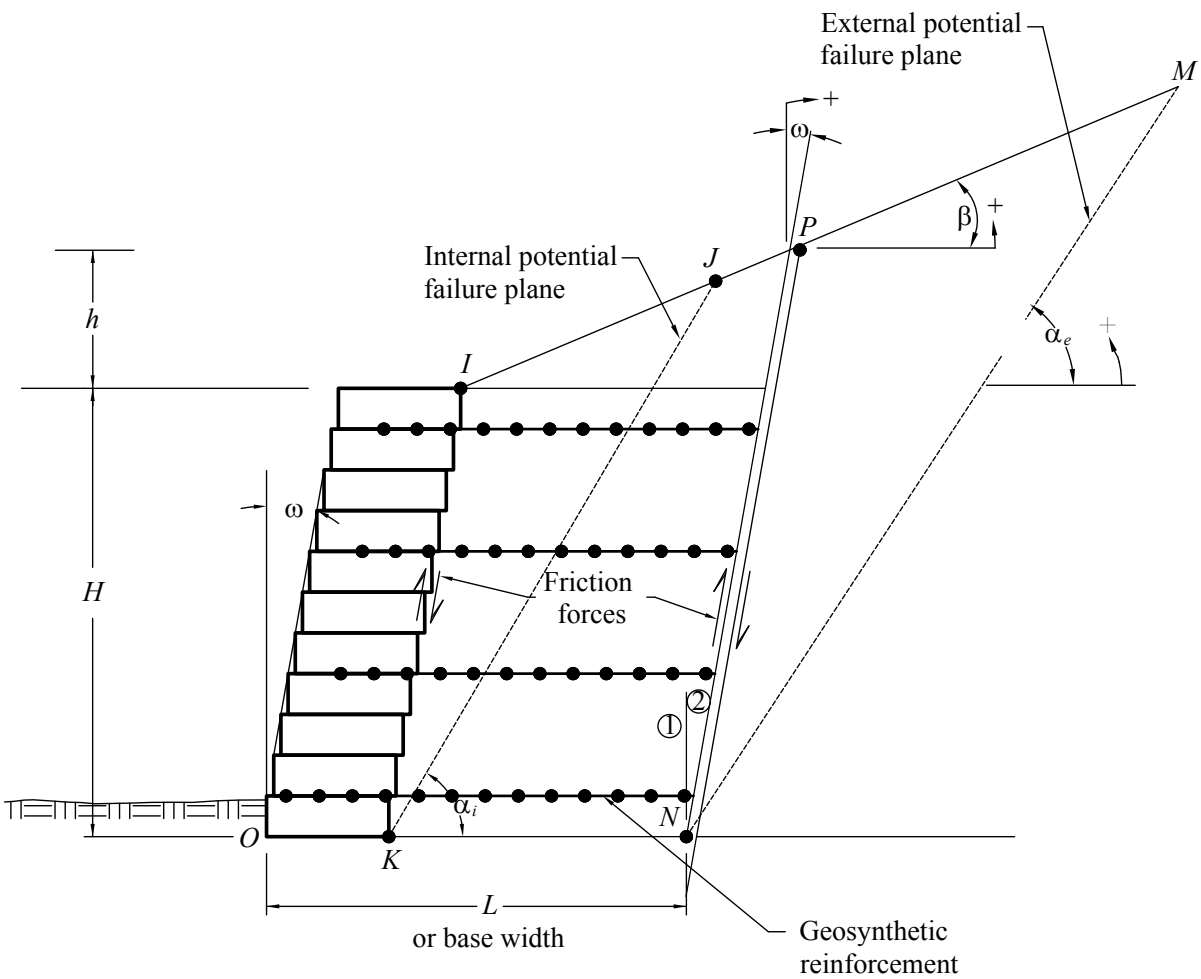

Note: ① Vertical wall face for external stability of multiple depth SRWs.
② Inclinced wall face for external stability soil reinforced SRWs.

Figure 2-7: Earth Pressure Distribution and Force Resolution SRW Systems

Passive resistance occurs through the development of bearing type stresses on "transverse" reinforcement surfaces normal to the direction of the soil reinforcement relative movement. Passive resistance is generally considered to be the primary interaction for geogrids and bar mats.

The contribution of each transfer mechanism for a particular reinforcement will depend on the roughness of the surface (skin friction), normal effective stress, grid opening dimensions, thickness of the transverse members, and elongation characteristics of the reinforcement. Equally important for interaction development are the soil characteristics, including grain size, grain size distribution, particle shape, density, water content, cohesion and stiffness [Ref. 58].

The designer must also ensure that for the design life of the structure, a candidate geosynthetic reinforcement has adequate tensile capacity within the soil and at the facing connection; plus sufficient anchorage length beyond the potential internal failure wedge to develop sufficient anchorage capacity to resist pullout of the reinforcement from the soil. A method to evaluate a candidate geosynthetic reinforcement material with respect to these criteria is described in the following sections.

2.5.2: Long-Term Design Strength

The Long-Term Design Strength (*LTDS*) of a geosynthetic reinforcement is the strength at limit equilibrium conditions in the soil. The *LTDS* is defined as the strength in the geosynthetic reinforcement at the end of the service life of a reinforced soil SRW, at which time all design criteria must be met for the structure to perform as intended. Therefore, in this manual reinforced soil SRWs will be designed for conditions (soils, environment and applied loads) anticipated at the end of the design service life.

Selection of the ultimate tensile strength (T_{ult}) for geosynthetic reinforcement is complex. The tensile properties of geosynthetics are affected by environmental factors such as creep, installation damage, aging, temperature and confining stress.

Polymeric reinforcements are generally durable materials that will perform for the life of the structure when properly designed. The considerations that are important in evaluating the long-term performance of the reinforcement are degradation due to physiochemical activity in the soil such as hydrolysis, oxidation and environmental stress cracking (depending on polymer type); installation damage, and the effects of high temperatures at the facing and connections of SRWs.

Because of varying polymer types, quality, additives, product geometry, and manufacturing processes each geosynthetic is different in its resistance to aging. Each product must, therefore, be investigated individually.

2.5.2.1: Determination of the Long-Term Design Strength of the Geosynthetic

The following procedure to determine long-term design strength (*LTDS*) for SRW design has been adapted from the US Department of Transportation - FHWA Publication No. FHWA NHI-00-043 DP. 82-1 *Mechanically Stabilized Earth Walls and Reinforced Soil Slopes - Design and Construction Guidelines* [Ref. 58]. A full description of the procedure is provided in Appendix C.

The long-term design strength of the geosynthetic is determined as follows:

$$LTDS = \frac{T_{ult}}{RF_D \cdot RF_{ID} \cdot RF_{CR}} \qquad \text{[Eq. 2-3]}$$

where:

T_{ult} = Ultimate (or yield tensile strength) from single or multi-rib tensile strength test (ASTM D 6637) for

geogrids or wide width tensile strength tests (ASTM D 4595) for geotextiles based on minimum average roll value (MARV) for the product.

RF_D = Durability reduction factor is dependent on the susceptibility of the geosynthetic to attack by microorganisms, chemicals, thermal oxidation, hydrolysis and stress cracking. The typical range is from 1.1 to 2.0. The minimum reduction factor shall be 1.1.

RF_{ID} = Installation damage reduction factor can range from 1.05 to 3.0, depending on backfill gradation and product mass per unit weight. The minimum reduction factor shall be 1.05 to account for testing uncertainties.

RF_{CR} = Creep reduction factor is the ratio of the ultimate strength (T_{ult}) to the creep limit strength obtained from laboratory creep tests for each product, and can vary typically from 1.50 to 5.0, depending on the polymer.

2.5.3: Soil-Reinforcement Interaction Performance

Reinforced SRW design requires an estimate of two soil geosynthetic reinforcement interaction coefficients. The coefficient of interaction for pullout, C_i, is required for calculations used to estimate the reinforcement pullout capacity within the anchorage zone of the reinforced soil mass. The coefficient of direct sliding C_{ds}, is required to estimate the resistance to internal sliding that is generated along the surface of a layer of geosynthetic reinforcement when a portion of the reinforced soil mass slides along its interface.

2.5.3.1: Coefficient of Interaction for Pullout

The coefficient of interaction for pullout, C_i, is used to relate the pullout resistance of the geosynthetic reinforcement to the available soil shear strength. The coefficient of interaction can be expressed mathematically as:

$$C_i = \frac{R_{po}}{2L_e\ \sigma_n\ \tan\phi_i} \qquad \text{[Eq. 2-4]}$$

where:

R_{po} = maximum pullout resistance (lb/ft)
L_e = horizontal length of geosynthetic in the anchorage zone (ft)
σ_n = normal stress acting over the geosynthetic anchorage length (psf)
ϕ_i = peak angle of internal friction for the reinforced (infill) soil (deg)

The factor 2 in the denominator represents the number of interface surfaces for soil above and below the reinforcement. The coefficient of interaction for pullout for geotextiles or geogrids is determined directly from large scale pullout testing using sample candidate products that are at least 24 in. (610 mm) in length and site specific soils (or similar soils based on USCS) compacted to densities anticipated in the field. Pullout testing procedures should follow ASTM D 6706 Standard Test Method for Measuring Geosynthetic Pullout Resistance in Soil. Calculation of pullout capacity requires the peak internal friction angle, ϕ_i, of the anchorage soil be known. The reinforcement sample is placed over the reconstituted soil and then buried. A confining pressure σ_n is applied to the top of the soil sample to simulate the vertical pressure that is anticipated for the anchorage elevation examined.

Due to the variety of shapes and product structures in commercially available geosynthetics, it is important to note that C_i will vary between geosynthetic products and may change with magnitude of normal pressure applied to samples of geosynthetic. Therefore, it is important that tests be conducted over the range of confining (normal) pressures anticipated in the field and the appropriate C_i for each reinforcement elevation be utilized.

The typical service life (100 years) of SRWs requires the C_i used in design represent a long-term parameter. To ensure the C_i value determined from pullout testing is unaffected by time dependent properties, the pullout resistance in

design should be limited to the creep limited strength of the geosynthetic (T_{ult}/RF_{cr}). In addition, the shear strength parameters for the soil should be adjusted for creep behavior if applicable. However, creep potential of reinforced soil is not a concern if well compacted granular soils are used in the reinforced (infill) soil zone. The potential for creep exists for cohesive soils such as MH, CH, OL, and OH; soil types not recommended for use with SRWs.

2.5.3.2: Coefficient of Direct Sliding

Geosynthetic reinforcement layers may create preferred planes of sliding within the reinforced (infill) zone of a SRW structure. The movement of a portion of the reinforced (infill) soil mass across a stationary layer of geosynthetic reinforcement is modeled as a direct shear failure mode in internal stability calculations. The coefficient of direct sliding, C_{ds}, shall be determined in accordance with *Standard Test Method for Determining the Coefficient of Soil and Geosynthetic or Geosynthetic and Geosynthetic Friction by the Direct Shear Method,* ASTM D 5321 [Ref. 74]. Parameter C_{ds} is to be calculated as follows:

$$C_{ds} = \frac{R_{ds}}{L\ \sigma_n \tan\ \phi} \qquad \text{[Eq. 2-5]}$$

where:

R_{ds} = maximum shear resistance from direct shear test (lb/ft (kN/m))
L = stationary length of geosynthetic (ft (m))
σ_n = normal stress on geosynthetic sample (psf (kPa))
ϕ = peak angle of internal friction of the soil (deg)

The value of C_{ds} can be expected to vary with normal stress and, therefore, the tests should be carried out over a range of confining pressures expected for reinforcement layers in the proposed structure. In the absence of site-specific soil testing, the magnitude of C_{ds} may be estimated from manufacturer's test data using similar soil or soils with lower shear strength than project soils. In no case shall C_{ds} be assigned a value greater than one.

SECTION 3
ROLES AND RESPONSIBILITIES ON PROJECTS INVOLVING SRWS

On all construction projects, including those involving SRWs, it is the owner's responsibility to achieve coordination between construction and design professionals to ensure all necessary and required design, engineering analysis, and inspection is provided. In many cases a design professional such as a site civil engineer or an architect will act as the owner's representative, and if acting in this role, should ensure all needed engineering is provided. Either the owner directly, or the owner's representative, should ensure that the engineering design professionals' scope of work, roles, and responsibilities are clearly defined so that there is no ambiguity regarding responsibility for investigation, analysis, design, and testing.

The roles outlined in the following subsections are typical industry standard roles for various engineering disciplines. It is suggested that SRW design and construction be no exception to these traditional roles. The assignment of these proposed roles are simply meant as suggested guidelines. These roles may vary from project to project, however, depending on the contractual obligations of each consultant. For the simpler, residential landscape projects, just one design professional may take on the responsibility of several of these roles, if acceptable to local building code requirements. For tall or complex walls and commercial projects, each of these roles is likely to be provided by separate firms with expertise in a particular discipline. The remaining discussion in this section is generally oriented towards projects where several design professionals are contracted for each distinct role.

The design community has many professionals that have the education and experience to fulfill the roles outlined in this chapter. It is the responsibility of the owner or owner's representative, who is developing or changing the current configuration of their land, to contract with professionals to validate that these roles are properly addressed. To ensure that the design professionals are acting in the best interest of the owner or owner's representative, there should be a direct contractual relationship between the owner or owner's representative and the design professionals. In some cases, design firms are multidisciplinary and are able to handle various roles of the overall design and inspection requirements, in other cases multiple design firms that specialize in one or more areas are brought together to form the collective design team. For these reasons, having the design and inspection portions of the project being the responsibility of the same company contracted to build the walls should be discouraged.

Reinforced SRWs, because of their nature as composite soil structures, may have unique design and inspection considerations for the site civil engineer, the geotechnical engineer, and the independent testing agency. These considerations are discussed in further detail in the following subsections. For the design professional that is not directly tasked with the structural design of the SRW, technical guidance is provided for the site civil and geotechnical engineer in Sections 11 and 12 respectively. Wall design and engineering guidance for the SRW engineer is left for thorough discussion in Sections 4 through 10.

Section 3.1: Overview of Roles

The most straightforward means for the owner to ensure all engineering roles are well-defined in regards to a SRW is for the SRW design engineer's assigned roles to be the same as those traditionally given to a structural engineer designing a cast-in-place retaining wall. The other design professionals, such as site civil and geotechnical engineer, should then provide the same engineering roles and consulting services as they would for a project involving a cast-in-place retaining wall.

The owner/developer, or a designated representative, of the project is ultimately responsible for ensuring that all applicable requirements of governing authorities for the permitting, design, construction, and safety on the project are addressed. The owner, or owner's representative, should ensure the types of retaining walls that are specified are appropriate for the site conditions and ensure the wall alignment fits within the site's space limitations. It is

the responsibility of the owner, or the owner's representative to contract an engineer to provide site civil engineering including site layout, drainage, and grading. The owner must also ensure a geotechnical engineer and testing agency are contracted to provide all necessary and required soils exploration, analysis, and earthwork inspection for the entire project, including in the vicinity of the SRWs, just as they do in the vicinity of building structures. The owner or owner's representative must also ensure a qualified wall design engineer provides a structural design of the SRW.

The following is an itemized list of the suggested roles for each professional discipline for larger walls and commercial projects involving SRWs. A more thorough explanation of the site civil engineer, geotechnical engineer, SRW engineer roles, and construction observation and testing roles is provided following these lists. The actual responsibilities for each discipline should be contractually based.

Owner/Developer or Owner's Representative Roles

- Ensure that design professionals are contracted to provide all needed engineering evaluation, layout, design, testing, and inspection required.

Landscape Architect/Architect Suggested Roles

- May act as specifier of retaining walls, rather than site civil engineer, primarily for walls near building structures (architectural walls) or for landscaping features.
- Specify retaining walls appropriate to project conditions, if not civil engineer's responsibility.
- For walls near building structures or for landscaping, retaining wall layout and alignment on site plan, if not site civil engineer's responsibility.
- Coordination of SRW layout with site civil engineer's site and grading plans.

Site Civil Engineer Suggested Roles

- Specify retaining walls appropriate to project conditions.
- Act as SRW Engineer (see below) when wall design done in-house.
- Prepare site plan and grading plan, including slopes and SRW heights and alignments.
- Address any space limitations and easement issues in regards to SRW layout.
- Design of surface grading for drainage and design for erosion control around SRWs.
- Design of storm-water collection structures and detention/retention ponds.
- Utility design and layout around SRWs.
- Pavement section design and grading above SRWs.
- Layout of traffic control structures such as pedestrian fall protection, curbs, wheel stops, guide rails, and traffic barriers behind walls.
- Hydrologic evaluations including water flows, scour depths, flood areas, and high water level predictions around SRWs.
- Ensure SRW engineer is contracted for involvement in pre-construction meetings and construction inspection services coordination.
- Construction observation of the overall wall structure installation and review of SRW material submittals, if SRW engineer is not contracted specifically for these services.

Geotechnical Engineer Suggested Roles

- Subsurface investigation including any needed soil borings and laboratory soils testing.
- Defining pertinent subsurface conditions including soils, rock, and groundwater conditions in area of SRWs.
- Determining properties and strengths of retained soil/rock behind and foundation material underneath the SRWs as well as propose soil for use as reinforced fill.
- Evaluation of foundation capacity below SRW including bearing capacity and settlement estimates and recommendations for any needed foundation improvements.
- Global stability analysis throughout site including above and below SRWs.
- Supervision and coordination of slope stability evaluation and corrections around the SRWs with the SRWs engineer.

- Evaluation of seismic potential and recommended design accelerations, if applicable.
- Construction inspection and testing of on site and fill soils (generally on a time and materials basis, separate from the soils exploration report contract).

SRW Engineer Suggested Roles

- Design of SRW for structural stability including external stability (sliding and overturning), internal stability, and facial stability.
- Determination of the maximum unreinforced height of SRW.
- Design of geogrid layout for taller walls requiring soil reinforcement.
- Determination of minimum embedment of wall (except in the case of scour depth or erosion control issues, which should be determined by site civil engineer).
- Specification and/or approval of wall unit, geogrid reinforcements, drainage material within wall structure, and reinforced soil properties.
- Determination of what structures can or cannot be placed within reinforced soil zone and wall face, and detailing for SRWs to accommodate acceptable structures.
- Under the direction of geotechnical engineer, assist in the coordination of slope stability evaluation around and through the SRWs and the design of the geogrid in reinforced SRWs to address slope stability in vicinity of SRWs, as needed.
- If contracted to and notified, construction observation of the overall wall structure installation and review of SRW material submittals (generally on a time and materials basis, separate from the wall design contract) - (see Construction Observation and Testing Agencies Suggested Roles below).
- When required by state law that the SRW engineer must be a licensed professional structural engineer (S.E.), then structural engineer also takes on SRW engineer role. In this case, the general project structural engineer often may be a different firm than the SRW structural engineer, depending on the project structural engineer's familiarity with SRWs and their interest in designing SRWs.

Construction Observation and Testing Agencies Suggested Roles

- Earthwork inspection preferably performed by the geotechnical engineering consultant.
- Inspection of SRW foundation area, including area below planned geogrid-reinforced soil fill, to verify bearing, soil, and groundwater conditions meet design assumptions.
- Inspection of native soils in retained zone for consistency with reported soil types and properties.
- Monitoring of fill placement and laboratory and field testing to ensure proper soil types used for fill and proper compaction achieved.
- Overall wall material installation inspection – preferably contracted directly with SRW engineer or site civil engineer.
- Construction observation of wall unit and geogrid installation.
- Review of material submittals for conformance with specifications.
- Additional review of soil properties and earthwork testing, provided by the geotechnical engineer, for conformance with wall materials' specifications.

Structural Engineer Suggested Roles

- Structural design of appurtenant structures to SRW such as guide rails, traffic barriers, and structural slabs at top or bottom of wall.

Section 3.2: Site Civil Engineer Suggested Roles Overview

It is suggested that the site civil engineer be contracted for all traditional site civil tasks, including the design of surface drainage, storm drainage collection structures, utility layout, erosion control, and scour protection. The site civil engineer is also typically responsible for site layout and grading plans, including slopes and retaining wall locations. The site civil engineer should ensure all planned grades, including those at the top and bottom of SRWs, do not exceed

the stable slope angles, in consultation with the geotechnical engineer, and do not cause surface drainage or erosion problems. It is suggested that the site civil engineer properly plan the wall alignment so that the SRW structure does not encroach on any easements and that site civil engineer be responsible for any other issues related to the wall location, such as proximity to property lines, utilities, watersheds, wetlands, or any other easements. In some cases, the site civil engineer may also act as the SRW design engineer and take on suggested roles for the SRW Engineer discussed in Section 3.4. The site civil engineer should evaluate and design for any hydrologic issues and structures such as:

- culverts,
- open channels,
- detention/retention ponds, and
- scour and erosion control structures.

and define

- high water levels,
- flow volumes,
- flood areas, and
- scour depths.

The site civil engineer should provide any pertinent hydrologic data that may affect the SRW to the SRW engineer. Design and engineering guidelines for site civil engineers for sites involving SRWs are provided in Section 11.

Often, when not designing the SRW in-house, the site civil engineer specifies the engineering design of SRWs to be part of the SRW construction contract (a design/build bid). While it has been a common practice for civil engineers to specify the SRW design be provided as part of the wall construction bid, there are number of reasons why this practice may be inappropriate and is thus discouraged by this manual. Such a design/build bid can place the SRW engineer in a different position than other project engineers. Unlike other engineers working directly for the owner, the SRW engineer in this design/build case is often working directly for a contractor, who is often a subcontractor to other contractors. This can cause design coordination issues because the SRW engineer may not be included in project discussions with other engineers, such as pre-construction meetings. It is preferable to have the SRW design engineer perform the design prior to bidding the wall construction rather than as a part of a construction bid. This is even more sensitive for larger walls or complicated sites where a significant coordination is often needed between the civil, geotechnical, and SRW design engineers and that this design coordination be accomplished before construction bids. Therefore, it is suggested that the site civil engineer first determine if it is appropriate for a given project to have the SRW engineering design specified as part of the wall construction contract. If it is the responsibility of the site civil to determine roles and the civil engineer still chooses to specify the SRW design as part of the construction bid, then the site civil engineer should ensure the SRW design engineer is involved in any needed design and construction observation services before and during construction, similar to the way geotechnical engineers are often contracted for their services during construction.

Section 3.3: Geotechnical Engineer Suggested Roles Overview

It is recommended that the geotechnical engineer be contracted to provide the same engineering roles in the vicinity of the SRW as they do for all other structures on site. The geotechnical engineer's typical roles are the investigation, analysis, and testing of the site soil materials and groundwater conditions. Just as geotechnical engineers traditionally provide bearing capacity, settlement estimates, and slope stability analysis for building structures, it is recommended they do the same for SRWs. The geotechnical engineer's role should include providing soil properties such as soil strengths and bearing capacities to the SRW engineer, just as the geotechnical engineer would provide to the structural designer of a cast-in-place wall.

Slope stability evaluation around a SRW can be a source of confusion in the roles of the various design professionals. Some confusion arises around SRWs because a SRW engineer can often address slope stability issues near a geogrid-reinforced SRW by modifying their wall design's geogrid layout. Thus the SRW engineer is sometimes requested to evaluate and design for slope stability concerns around a SRW by the civil engineers specifications.

It is recommended that, regardless of the involvement of the SRW engineer in addressing global stability around an SRW, the geotechnical engineer should be contracted to have the ultimate slope stability responsibility for all areas of the site, including determining when and where global stability analyses are needed, ensuring the appropriate soils and groundwater properties are used for these analyses, and ensuring that all needed failure planes are analyzed. It is recommended that the geotechnical engineer be contracted to directly perform the needed slope stability analyses themselves. While the geotechnical engineer may need to coordinate with the SRW engineer for evaluation of potential failure planes that pass through SRW geogrid-reinforced soil, it is suggested the geotechnical engineer still act in the primary role of responsibility for these analyses. The geotechnical engineer can use their soils expertise, and their knowledge of overall site conditions, to insure all needed global stability evaluations are provided.

When the geotechnical consultant is retained to provide construction observation and soils testing for a project, this contract should include inspection and testing of SRW earthwork along with all other earthwork on site. See Section 13 for further discussion of inspection roles.

While geotechnical engineers should be contracted for the same traditional roles around SRWs as around other structures, the soils engineering around SRWs may require some slightly different methods of analysis compared to evaluating soils below rigid structures on spread footings. As such, design guidelines for geotechnical engineers working on projects that involve SRWs are provided in Section 12.

Section 3.4: SRW Design Engineer Suggested Roles Overview

It is suggested that the SRW design engineer serve the same roles for SRWs as a structural engineer would for the design of a cast-in-place retaining wall. In some cases the site civil engineering firm may act as the SRW design engineer while in other cases the SRW design engineer will be associated with a separate firm. The SRW design engineer should design a stable SRW, given the specified wall geometry and site conditions provided by the site civil engineer and the geotechnical engineer. The SRW engineer's duties typically would include determining the SRWs maximum stable unreinforced height and, when geogrid reinforcement is needed, providing a geogrid layout design.

The SRW design engineer will be responsible for preparation of the SRW construction drawings, internal stability, facial stability of the SRW units, internal drainage of the SRW (both at the face of the wall and at the rear of the reinforced soil mass, if required), external stability (sliding and overturning), and internal compound stability. Sections 5 through 10 of this manual address the engineering methods available to the SRW design engineer in fullfilling their roles and responsiblities.

The wall designers output would generally consist of specifications of wall components, a wall elevation detail, typical cross sections, details for any needed drainage materials within or just behind the wall system, and details for how to incorporate any other structures (utilities, pipe penetrations, posts etc.), if feasible, within the reinforced zone and wall face.

It is suggested that the SRW design engineer not assume any duties typically relegated to the geotechnical engineer elsewhere on site. While a SRW engineer may be asked to participate in addressing the slope stability immediately around a SRW or foundation improvements in the soil below a SRW, it is recommended that the geotechnical engineer always be clearly contracted to have ultimate responsibility for all slope stability and bearing capacity/ settlement concerns on site, including those below and around SRWs.

It is appropriate that the SRW engineer be contracted to provide services during construction, especially on larger projects, but it is recommended that these services <u>not</u> be required as part of the a design/build bid of the wall construction. Time lag between design and construction can make it impractical to expect the designer be available for services during construction and given the often unpredictability of the extent and timing of the wall construction, it is inappropriate to have services during construction be in a lump/sum design/build contract. Rather, it is suggested

the SRW engineer be hired under a separate contract and budget to provide services during construction, such as pre-construction correspondence and meetings, review of materials submittals, and review of earthwork testing performed by geotechnical engineer, and review of wall contractors building practices.

Section 3.5: Construction Observation and Testing Suggested Roles Overview

The soil in the reinforced zone should be checked to ensure it meets specifications; just as concrete and steel are inspected in cast-in-place concrete retaining wall. The wall contractor is responsible for quality control of the wall installation: performing necessary observation and testing to verify work performed meets minimum standards. It is the responsibility of the owner or owner's representative to perform quality assurance: auditing and verifying the quality control is being performed properly. Just as done for building structures and cast-in-place retaining walls, foundation and retained soils should be evaluated for consistency with soil properties used in the design. Generally, the evaluation of the onsite soil conditions and earthwork testing is provided by the geotechnical engineer. It is suggested that the geotechnical engineer do any field and laboratory testing they deem needed to ensure proper soil conditions and that they confer with the SRW engineer regarding the reinforced soil specifications and provide the SRW engineer with their test results on the fill soil.

SECTION 4
WALL LAYOUT AND PLANNING

An important part of the design process is to identify the retaining walls on a given project. Most often, retaining walls are identified on the *Grading Plans*, which are typically a part of the project's civil drawings. With the aid of an example, the following sections will help the wall design engineer to read and identify the characteristics of the retaining wall from the grading information provided by the civil engineer. Also, from this information, the designer will be able to recognize problem areas that can be brought to the attention of the civil engineer, who then can make necessary revisions. At this point in the process, before the wall design is completed, it is important that there is a clear line of communication between the wall design engineer and the civil engineer so that any problems with the wall can be resolved early in the design.

Section 4.1: Wall Layout Example

As a means to describe the laying out process of a retaining wall, an example will be used as shown in Figure 4-1. This wall layout example is intended for the wall design engineer, however, it also highlights issues that are typically the responsibility of other design professionals such as the project civil engineer or the geotechnical depending on the contracted roles for each professional. For additional discussion about roles and responsibilities of various professional in relation to projects with SRWs, see Section 3 of this manual. Also, Section 11 provides guidelines for civil engineers to address some of the issues highlighted in this example, when they are preparing site layout and grading features around SRWs.

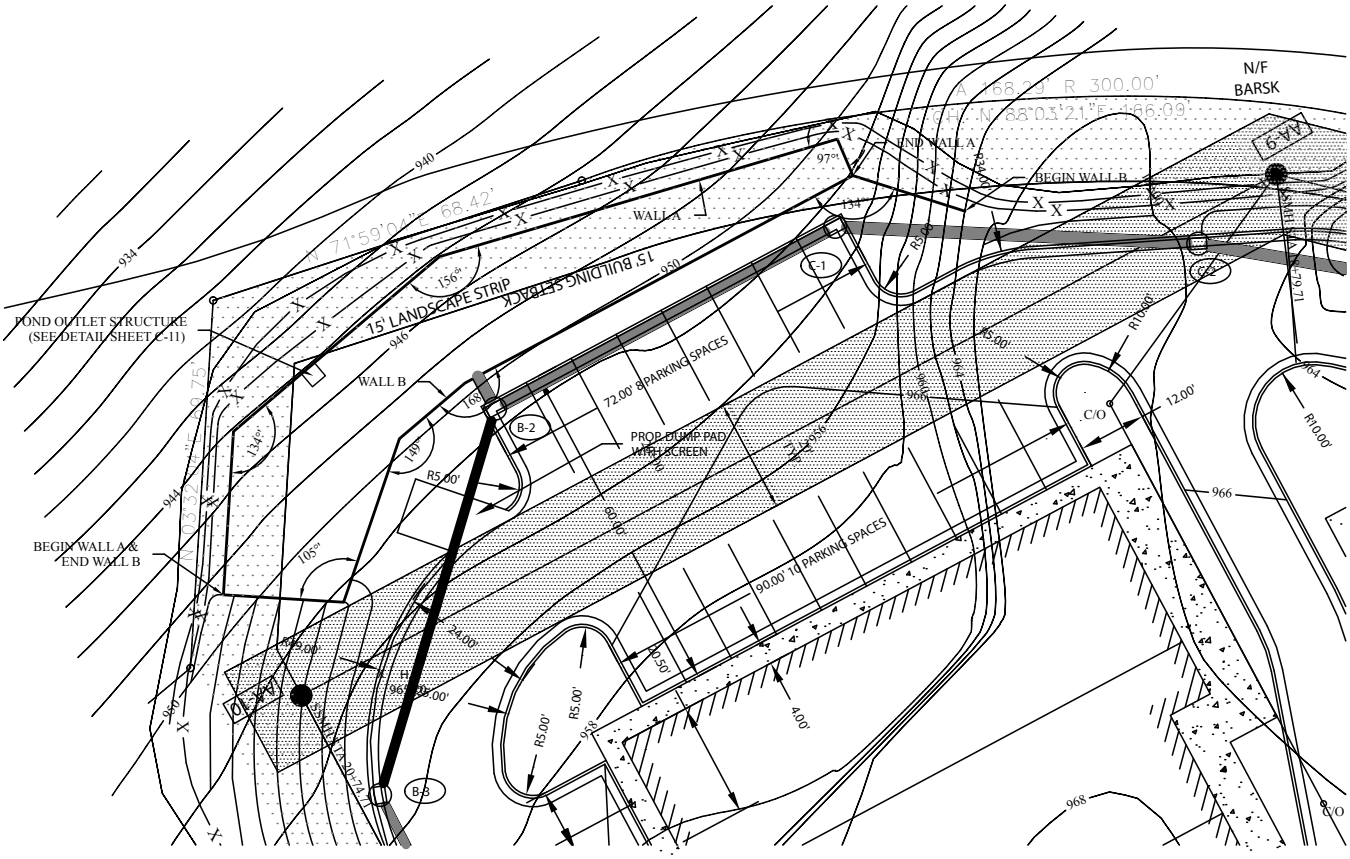

Figure 4-1: Part of a Grading Plan

Section 4.2: Site, Grading, and Utility Plans

The following pertinent information typically can be obtained from the site civil plans (or in some cases the landscape architecture or architecture plans), sometimes all this information is on the grading plans, sometimes it is separated on several plan sheets such as site layout, utility, and landscape plans.

- Location of retaining walls
- Property lines, buffers, limits of disturbance, easements, tree lines, etc…
- Utilities (may be on utility plans), including storm and sanitary sewer lines, water mains, electrical lines, etc…
- Existing and proposed contour lines
- Loading features such as parking areas, embankments, buildings, etc…
- Scale of drawing

An example of part of a grading plan is shown in Figure 4-1.

4.2.1: Location of Retaining Walls

Two (2) retaining walls have been identified on the grading plan; Wall A and Wall B. Wall A does not hold back soil and therefore cannot be an SRW, but rather a cast-in-place concrete wall. Wall B does retain soil and can be designed as a reinforced SRW. Both walls abut each other to form a detention pond.

Once the SRW has been identified, the wall designer must determine the "high" and "low" side of the retaining wall. This will determine the beginning and end of the retaining wall. It is customary to designate, if facing the retaining wall, the beginning of the wall at the left hand side and the end at the right hand side.

It is customary for the retaining wall to be shown as a line (of no real thickness) on the grading plan. Because SRWs are installed with batters (setbacks), this can cause some unforeseen space problems, especially in higher walls, with or without toe or backslopes. It is important to determine whether the line on the grading plan refers to the planned top of the wall or the bottom of the wall. The sketch on Figure 4-2 illustrates the potential confusion.

If the line on the grading plan representing the retaining wall refers to the bottom of the wall (left-hand side of Figure 4-2), significant loss of space at the top of the wall is incurred. Similarly, if the line on the grading plan representing the retaining wall refers to the top of the wall (right-hand side of Figure 4-2), significant loss of space at the bottom of the wall is incurred; and, if there is a toe slope present, additional height to the wall will occur.

As mentioned previously, most SRW concrete blocks are provided with a setback that results in an overall inclination. The inclination varies from near vertical (2-degree inclination) to 20 degrees. In this manual, the maximum inclination for a structure to be considered a retaining wall is 20 degrees. Structures inclined to angles greater than 20 degrees are considered to fall into the embankment category. The design of such reinforced steep slopes follows a different approach and is not covered in this wall design manual.

4.2.2: Property Lines and Other Space Limitations

<u>Generally the project civil engineer (or landscape architect or architect) is contracted to address space considerations and other limitations in their site layout, including, but not limited to:</u> property lines, buffers, limits of disturbance, easements, tree lines, etc…Such limitations and possible space constraints should be clearly indicated on the grading plan. Further guidelines for project civil engineers doing wall layouts as a part of their civil drawings is provided in Section 11.

It is common for retaining walls to be located at or very close to property lines. In the case where the wall is retaining the soil on the given project site, the entire SRW (facing and reinforced zone) can easily be located very

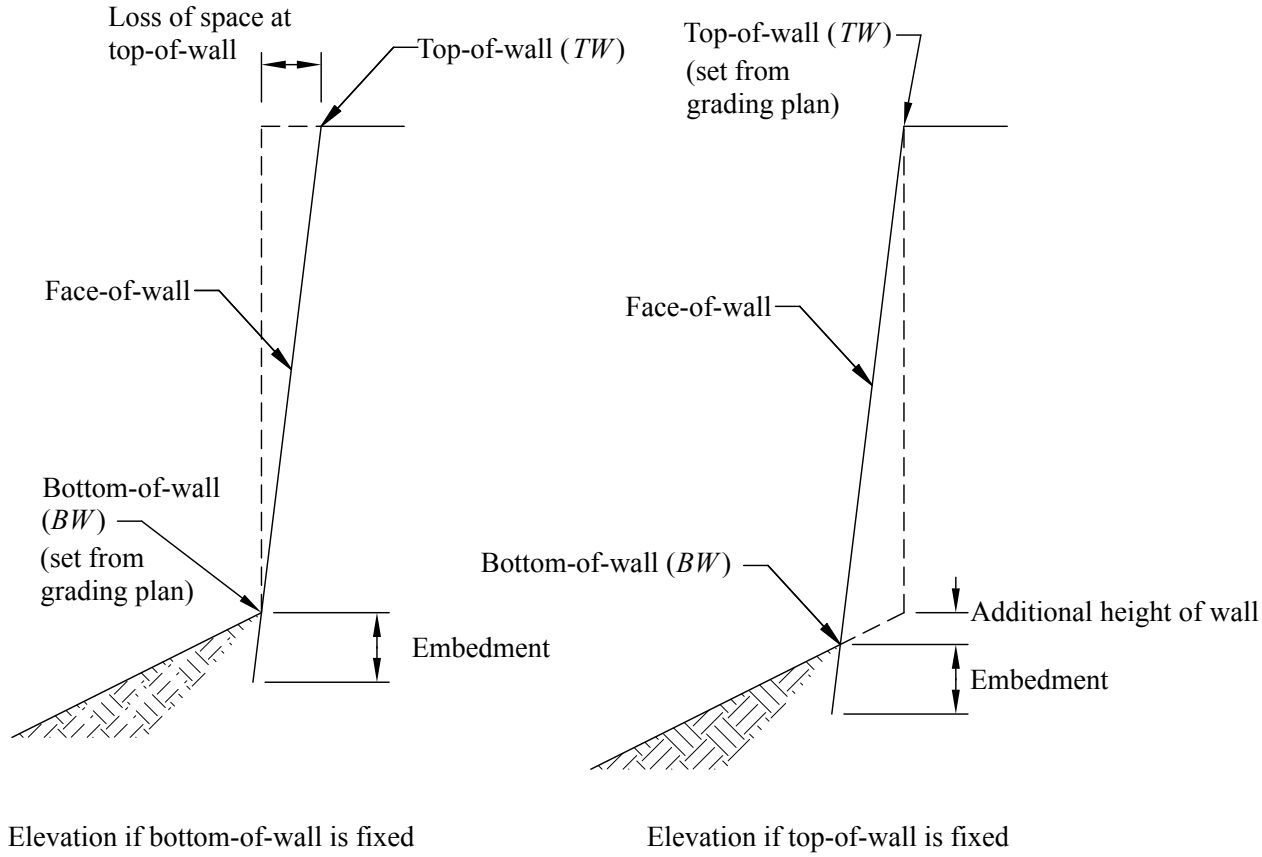

Figure 4-2: Location of Retaining Wall with Respect to Top and Bottom Elevations

close to the property line. In the case where the wall is supporting an adjacent property, however, enough space must be allocated to allow for the retaining wall, including reinforced zone and any excavated slopes. This is illustrated on the sketch on Figure 4-3.

The location of the retaining wall can also be dependant on space or boundary limitations on the site. For example, counties and municipalities may have specific buffers or easements for natural water courses such as creeks. Retaining walls are not typiclly permitted within these boundaries and the project civil engineer should be aware of these limitations in their typical role in providing site layout in conformance with applicable standards. Because the exact extent of reinforcement length needed behind the planned walls may not be known when the civil engineer is preparing the site layout and grading, they may not have accurately considered the space needed for the reinforced zone.

The retaining wall design engineer is typically not contracted to, nor considered responsible to, address proper layout and space constraints for the wall because the wall design engineer is typically not specifying the wall alignment. Rather, the wall design engineer is typically producing structural drawings for a wall alignment provided to them by others. If there are clear space constraints or limitations shown on the civil plans (such as property lines) that indicate the planned wall layout cannot accommodate the space needed for the reinforced wall, then the wall design engineer can provide an additional check by noting these issues to the owner and/or project civil engineer. The project civil engineer is typically responsible for knowing about any easement, property line, utility locations and any other space restriction issues and in such a role, should review final wall designs to ensure the footprint of the wall does not extend into restricted areas.

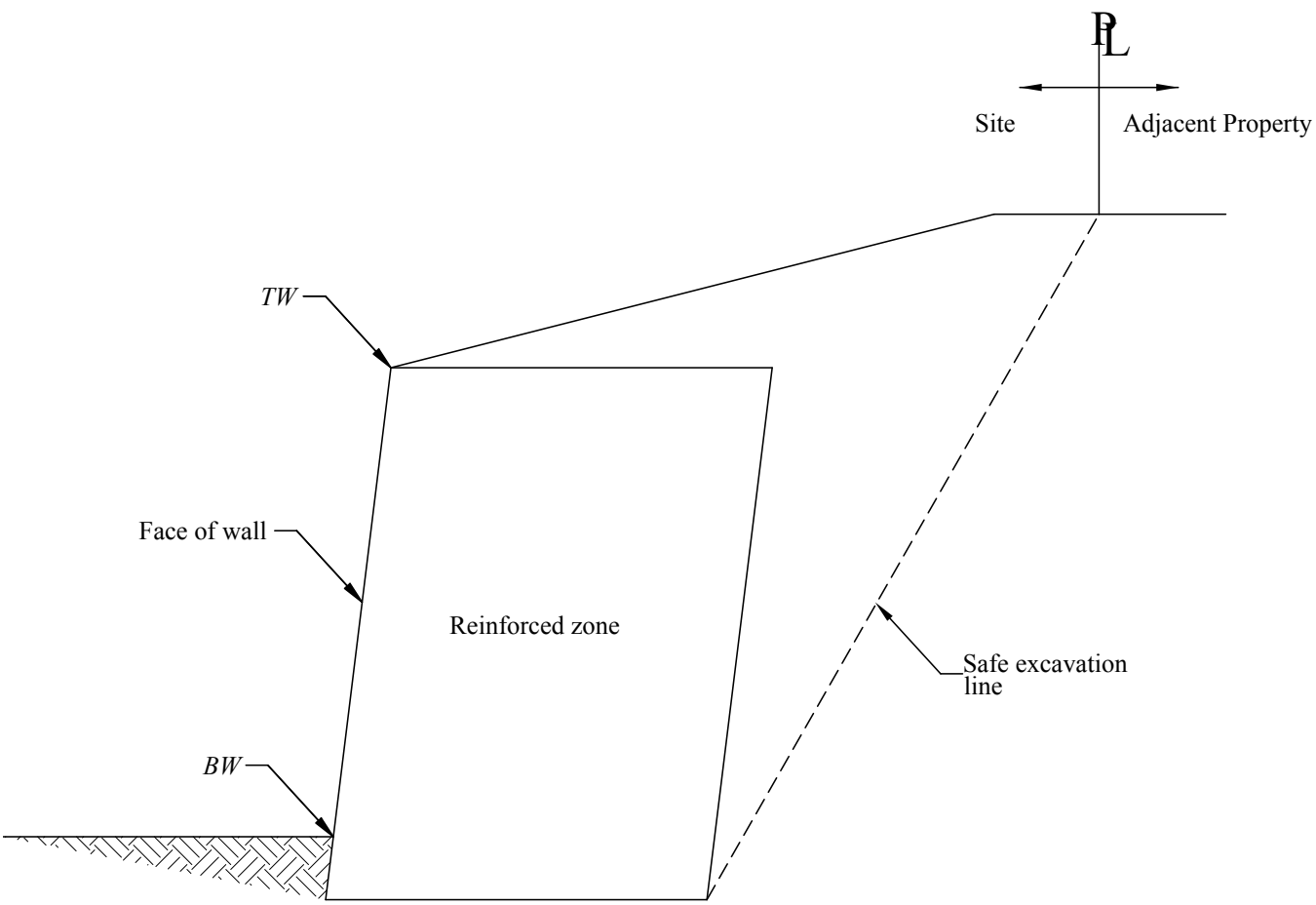

Figure 4-3: Location of Retaining Wall with Respect to Boundaries

4.2.3: Utilities

Location of buried utilities such as sewer and sanitary lines, water mains, and electrical conduits, as well as any drop structures associated with these utilities, must be included in the information provided by the project civil engineer. The grading plan on Figure 4-1 is a good example that clearly indicates the location of a proposed sewer line running parallel to Wall B. Also indicated on the plan are the locations of catch basin structures B-2 and C-1, as well as a perpendicular wall penetration at the B-2 location.

As a general rule, it is not recommended to locate any utilities within the reinforced soil zone. Section 11.9 provides further guidelines to project civil engineers locating retaining walls near planned utilities. In some cases, however, having utilities within a wall's reinforced zone is unavoidable. In these cases, the project civil engineer, wall design engineer, and geotechnical engineer should coordinate closely regarding the wall's structural concerns, maintenance implications, predicted settlement of the utilities present in the reinforced zone, and take precautions to ensure that the pipes properly function, remain water-tight, and maintenance of utilities is not likely to damage the wall.

Note that in the example shown on Figure 4-1, the storm sewer pipes are located in the reinforced zone. Also note that the catch basins B-2 and C-1 are located very close to the top of the retaining wall. In fact, if the line representing the retaining wall on the grading plan refers to the grade at the bottom of the wall, then the catch basins are actually <u>on</u> the top of the wall. This poses a problem and should be brought to the attention of the project civil

engineer and ideally, should be avoided by the civil engineer re-designing the planned layout of the catch basins and storm sewers. (See also Section 11.5 for a more through discussion on stormwater collection.)

Also indicated on the grading plan is the pipe penetration (at B-2 location) at the wall location into the detention pond area. Many times, when a retaining wall forms part or the entire perimeter of a detention pond, penetrations through the retaining wall can be expected. Pipe penetrations are not uncommon and, depending on the diameter, can be dealt with during construction without much difficulty (See also Section 11.6 for addressing penetrations through the face of SRWs.)

The topic of utilities and their location with respect to retaining walls is an important one. Section 11 provides guidelines for the civil engineer in preparing utility plans. If the civil engineer is conscious of the effects of utility location to the installation and long-term performance of retaining walls at the outset of the project, then there will be less difficulty in designing the retaining wall.

The same holds true for all structures, buried or not. In locating buildings, for example, the civil engineer should keep in mind that ideally, the building should be located outside the loading influence of the retaining wall. This will reduce any potential for lateral movement of the wall.

4.2.4: Contour Lines

Contour lines, both existing and proposed, will determine the grade at the top of the wall and the grade at the bottom of the wall. The wall design engineer should keep in mind the actual bottom of the whole wall structure (i.e., elevation at the leveling pad) will extend below the exposed wall heights represented by the contour lines on the grading plan. The actual bottom of the wall elevation will depend on the number of buried blocks. The number of buried or embedded blocks is generally determined by the wall design engineer and is a function of the height of the wall and the geometry of the slope at the front of the wall, as discussed in Section 5.5.2. Table 5-1 has minimum wall embedment depths for various conditions at the toe of the wall.

Contour lines are shown in 1-ft (305 mm) or (more often) 2-ft (610 mm) increments. Some grading plans will have the top and bottom of wall elevations called out at a number of locations along the wall. If this is the case, the wall designer should be satisfied that the called out elevations correspond to the contour lines at the given wall locations. Conflicts between callouts and grades should be addressed and clarified by the design professional that prepared the grading plan so the wall design engineer has accurate knowledge of planned wall heights before proceeding with their analysis. Contour lines will also give the designer information on the extent and angle of toe and back slopes.

4.2.5: Loading Features

Loading features such as parking areas, embankments, buildings, and detention ponds should all be indicated on the grading plans. It is important to identify these structures and their loading influence on the retaining wall. The plan on Figure 4-1 clearly shows the parking areas, the building locations, and the detention pond location with respect to the retaining wall. It is the wall design engineer's responsibility to assign the appropriate surcharge loading to the retaining wall for the design phase. Therefore, accurate information regarding planned features and their locations around the planned retaining walls is needed.

4.2.6: Miscellaneous Features

The wall design engineer must be able to identify other features on the plan that may affect the layout and ultimately the design of the retaining wall. For example, as mentioned earlier, the SRW on the plan on Figure 4-1 will be used in combination with a cast-in-place concrete wall to define a detention pond area. As a consequence of this, the SRW will abut the cast-in-place concrete wall at two locations. The designer must be aware of this feature and build it into the final design.

4.2.7: Scale

If the retaining wall designer is to scale distances off the grading plan, steps must be taken to ensure that the scale on the drawing is the right one. The designer must make sure that the scale has been labeled properly and, if possible, compare it to some known distance on the grading plan.

4.2.8: Additional Information

The grading plan is the first source of information required to layout the retaining wall. Additional important information may be required if, for example, there are utilities located adjacent to the retaining wall. In this case, it will be necessary to determine the depth and size of the utilities. This information is usually found on Utility Plan/ Profile sheets. Also, in some instances, Retaining Wall Profile sheets are available. The wall design engineer must remember that these profiles usually reflect final grades and do not take into account the modular block embedment or the dimensions of the modular block. Also, the wall design engineer must verify that the beginning and end of the wall on the profile sheets correspond to the definition given above.

The civil engineer is encouraged to create and provide Retaining Wall Profiles whenever possible. Without getting into the details of the retaining wall design (i.e., foundation steps, block layout, reinforcement layout, embedment, etc…) the civil engineer could provided a profile showing top grade and bottom grade as shown on Figure 4-4. This would provide the wall design engineer a point of verification.

The wall design engineer now has enough information to layout the retaining wall, which is the next important step in the design process.

Section 4.3: Retaining Wall Layout

Based on the information obtained from the grading (and other) plans, the designer now has the following information:

- Length of retaining wall,
- Dimensional features of the retaining wall such as inside/outside corners or bends,
- Grade at the top and at the bottom of the wall,
- Toe slopes and/or back slopes,
- Location and dimension of buried utilities, as well as wall penetrations,
- Loading conditions such as live and/or dead loads, length and angle of top of wall embankments, and
- Miscellaneous features that affect the geometry of the retaining wall.

With this information, the designer can know generate a retaining wall profile. The drawing on Figure 4-5 represents a profile or elevation drawing of the retaining wall (Wall B) represented on Figure 4-1. The next step in the layout process is to estimate the location of the reinforcement based on maximum recommended spacing of the reinforcement and constructability. As much as possible, the reinforcement layers are aligned laterally for ease of installation. The drawing on Figure 4-6 illustrates the elevation drawing with the initial configuration of the reinforcement.

Section 4.4: Design

The next step in the process is to determine the length and type of reinforcement, confirm the spacing of the reinforcement, and verify that the facing requirements are met. This is addressed in Sections 5 through 9 of this manual. In these sections, the designer is introduced, in a detailed manner, to the procedures involved in the design of reinforced-soil retaining walls with modular block facings. In this manual, the designer is shown how to satisfy external and internal requirements as well as verify the stability of the facing units under various types of loading

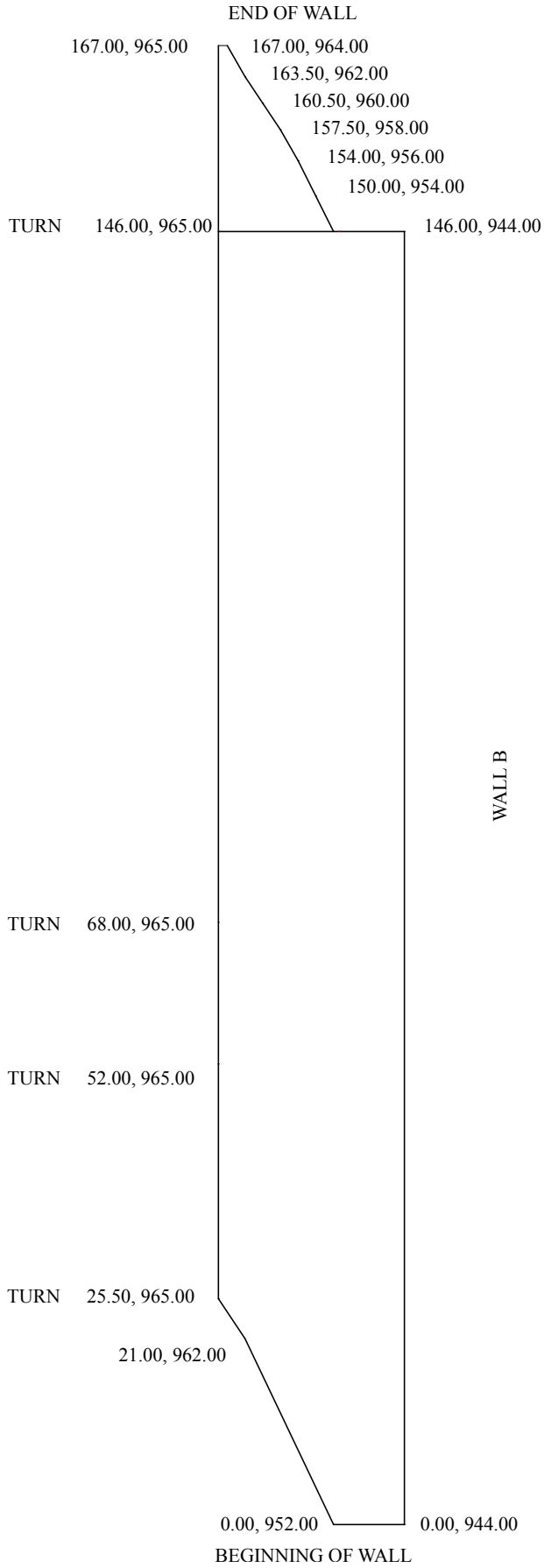

Figure 4-4: Elevation - Top of Wall and Bottom of Wall Grades

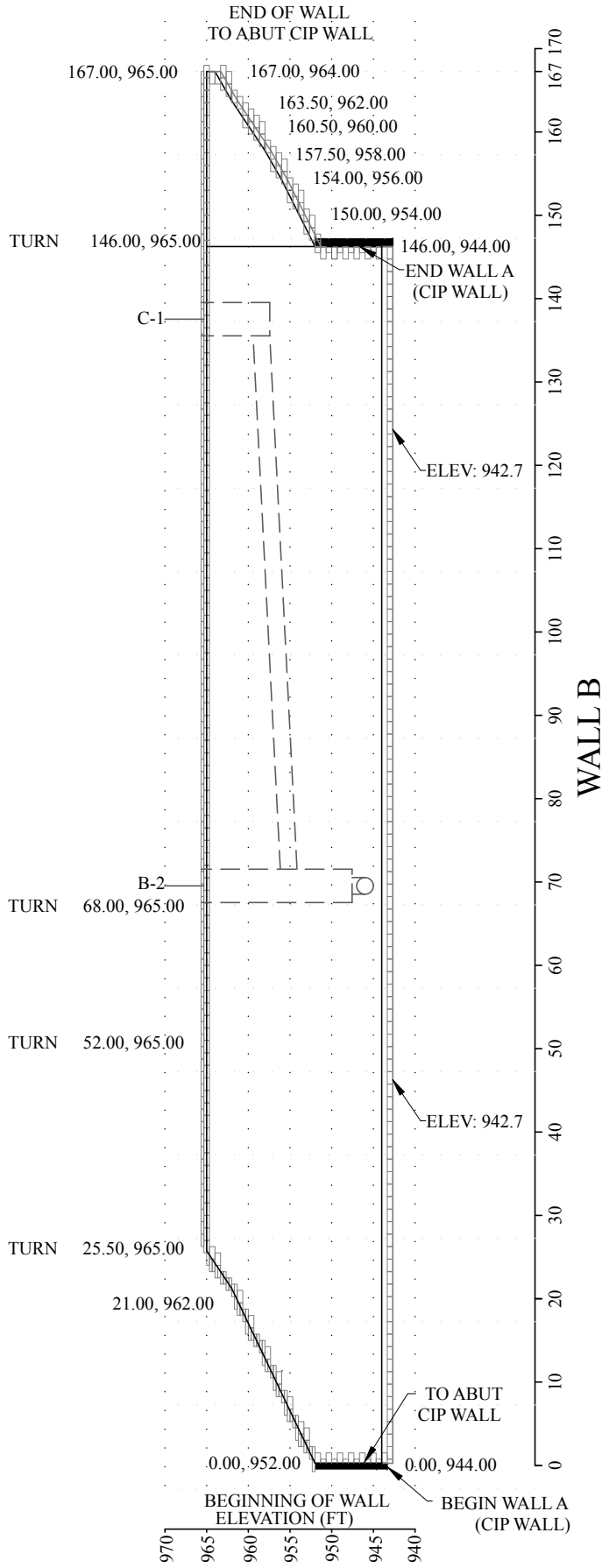

Figure 4-5: Retaining Wall Elevation

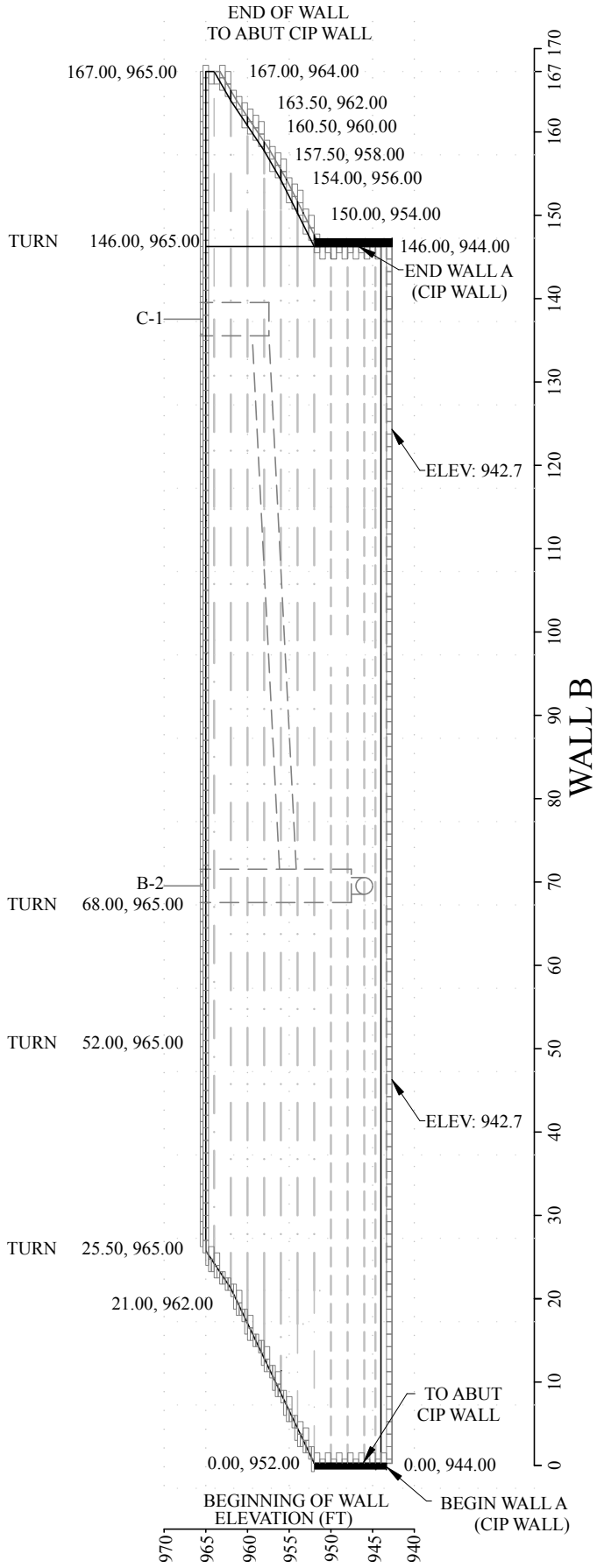

Figure 4-6: Retaining Wall Elevation with Initial Reinforcement Placement

conditions, including seismic (or dynamic). The designer will also be introduced to Internal Compound Stability (ICS) analysis in which failure of the retaining wall due to a series of circular failure planes generated within a given distance behind the wall and exiting at the face of the wall is analyzed.

Although the content of these sections describe a comprehensive procedure for design of reinforced-soil retaining walls, it is not all-inclusive. The final design of a retaining wall requires the participation of other professionals that will investigate and address such items as:

- Foundation soil competency,
- Settlement, and
- Global stability.

These items are outside the scope of the retaining wall designer and, as such, are not addressed in this manual. That is not to say that the designer will not get involved in some of these subjects, but the responsibility of the designer as far as this manual goes, is limited to requirements stated above. The roles and responsibilities of the different professionals responsible for the design and implementation of SRW retaining walls on a given project are covered in Section 3 of this manual.

Finally, from a technical point of view, the height to which SRWs can be built is limitless. From a practical point of view, however, experience with very high (>50 ft (15 m)) retaining walls is limited. Although SRWs have been successfully built in excess of this height, the knowledge and experience with the behavior of these structures at these heights is continued to be collected. The retaining wall designer should be aware that new and unique challenges are confronted at these heights.

SECTION 5
SEGMENTAL RETAINING WALL DESIGN OVERVIEW

Segmental retaining walls are divided into two groups of gravity retaining walls illustrated graphically in Figure 5-1.

Conventional SRWs are structures that resist external destabilizing forces, due to the retained soils, solely through the self-weight and batter of the SRW units.

Reinforced Soil SRWs are composite systems consisting of SRW units in combination with a mass of reinforced soil stabilized by horizontal layers of geosynthetic reinforcement materials.

Unstable

Narrower width and lower weight provides:
- reduced frictional resistance
- smaller resisting moments

Stable

Wider width and greater weight provides:
- larger frictional resistance
- increased resisting moments

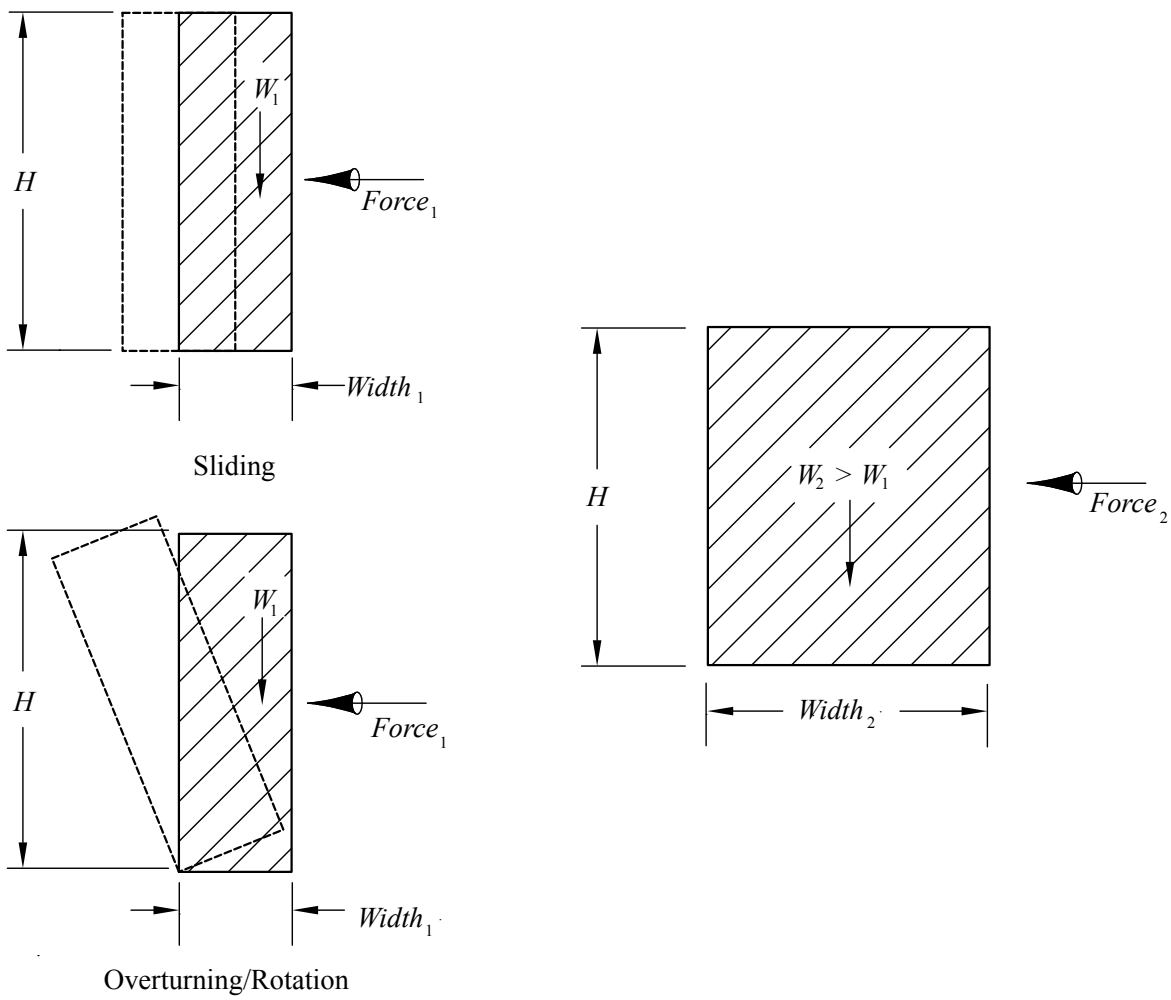

A. Mass 1

B. Mass 2

Figure 5-1: Gravity Wall Concept

Common to both types of structures are dry-stacked segmental units that are typically constructed in a running bond configuration as shown in Figure 2-1. The majority of SRW units available on the market are typically dry-cast, machine produced concrete without internal steel reinforcement.

Section 5.1: Conventional SRW Concepts

Conventional SRWs are separated into single depth and multiple depth categories (Figure 2-1A). The maximum wall height that can be constructed using a single depth unit is directly proportional to its weight, width, inter unit shear strength, and vertical batter of construction for any given soil and site geometry conditions. The maximum height can be increased by implementing a conventional crib wall approach using multiple depth units to increase weight and width of the wall; however, the design of these walls is not specifically covered in this manual. Additionally, more complex modes of failure are related to these types of structures.

Section 5.2: Reinforced SRW Concepts

Reinforced-soil SRWs utilize geosynthetic or metallic reinforcement to enlarge the effective width and weight of the gravity mass. The use and design of metallic reinforcement is not addressed in this manual. Geosynthetic reinforcement materials are high tensile strength, polymeric sheet materials. Geosynthetic reinforcement products may be geogrids or geotextiles, though most SRW construction to date has used geogrids. The geosynthetic reinforcement extends through the interface between the SRW units and into the soil to create a composite, gravity-mass structure. This enlarged composite gravity wall system, comprised of the SRW units and the reinforced soil mass, offers the required resistance to external forces associated with taller walls, surcharged structures, or more difficult soil conditions.

A reinforced soil mass is somewhat analogous to reinforced concrete in that the mechanical properties of the mass are improved by reinforcement placed parallel to the principal strain direction to compensate for soil's lack of tensile resistance. The improved tensile properties are a result of the interaction between the reinforcement and the soil. The composite material has the following characteristics:

- Stress transfer between the soil and reinforcement takes place continuously along the reinforcement.
- Reinforcements are distributed throughout the soil mass with a degree of regularity and must not be localized.

Stresses are transferred between soil and reinforcement by friction and/or passive resistance depending on reinforcement geometry. Friction develops at locations where there is a relative shear displacement and corresponding shear stress between the soil and reinforcement surface. Passive resistance occurs through the development of bearing type stresses on "transverse" reinforcement surfaces normal to the direction of the soil reinforcement relative movement.

The contribution of each transfer mechanism for a particular reinforcement will depend on the roughness of the surface (skin friction), normal effective stress, grid opening dimensions, thickness of the transverse members, and elongation characteristics of the reinforcement. Equally important for interaction development are the soil characteristics, including grain size, grain size distribution, particle shape, density, water content, cohesion, and stiffness [Ref. 58].

Section 5.3: Potential Failure Modes for Segmental Retaining Walls

Both conventional gravity and reinforced soil SRWs function as gravity structures by relying on self-weight of the wall system to resist the destabilizing forces due to the retained soil and surcharge loadings on the structure. The gravity wall concept is illustrated in Figure 5-1. To be stable, the gravity wall structure must form a coherent mass (weight) that has sufficient width to prevent both sliding at the base and overturning of the mass about the toe of the structure under the action of lateral earth forces. The wider and heavier Mass 2, in Figure 5-1, is more stable when compared to the more slender Mass 1. The stability of these masses also can be somewhat improved by constructing a wall with an inclined face as described in Section 6 and 7. Many of the design calculations described in the manual are focused on establishing the minimum base width of the gravity mass required to ensure stability

against sliding and overturning/rotation. The design methodologies presented herein are conceptually similar to the method used for any established gravity retaining wall structure such as: concrete, steel bin, etc.

For both conventional gravity and reinforced soil SRWs, the wall design engineer should evaluate forces acting on the boundary of the gravity mass through external stability calculations. Also, for all types of SRWs, the wall design engineer should analyze local stability of the dry-stacked column of SRW units. For reinforced soil SRWs, internal stability analyses are also required to ensure there is adequate strength and width to create a stable, monolithic gravity mass. For reinforced soil SRWs, the wall design engineer should analyze internal compound stability, which evaluates potential for failures that start behind the wall and also pass through the internal structure of the reinforced soil mass. For larger projects that have separate design professionals for each aspect of engineering, the

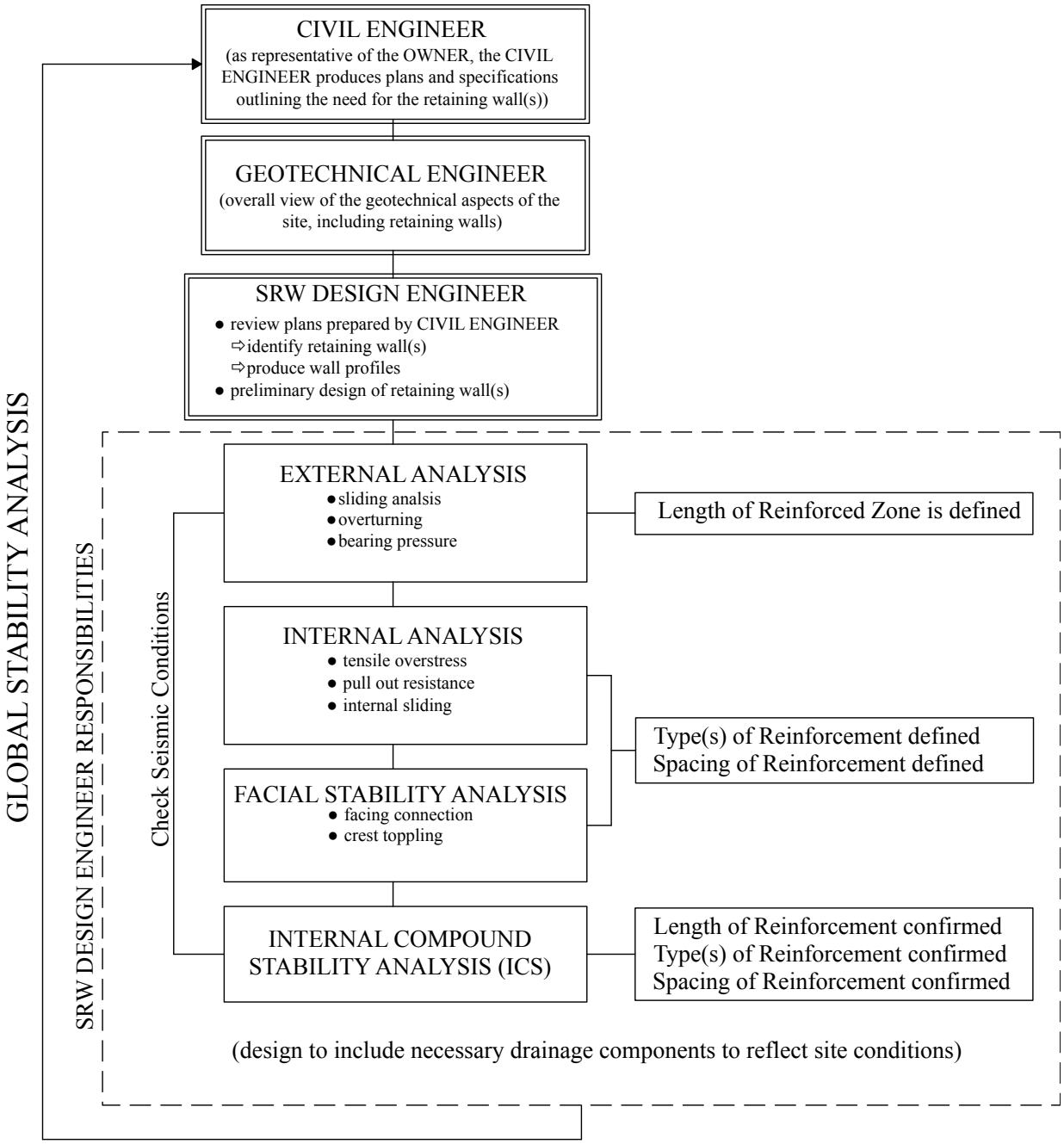

Figure 5-2: Design Methodology Flow Chart for SRWs

owner or owner's representative should ensure the site civil and geotechnical engineer evaluate the area surrounding the SRW for outside concerns that may affect the wall such as surface drainage, groundwater, excessive foundation settlement, and potential global/overall slope instability.

A summary of potential failure modes for conventional SRW structures and reinforced soil SRW structures are provided in Figures 5-3 and 5-4. Details of the stability calculations that are carried out with respect to each failure mode are described in subsequent sections of this manual. A flow chart for the design methodology and calculations associated with conventional and reinforced soil SRWs is presented in Figure 5-2.

5.3.1: External Stability

External stability calculations address sliding and overturning failure modes for both conventional and geosynthetic reinforced SRWs. The potential for sliding of the SRW is a function of the shear strength of the retained soil, weight of the SRW system, and friction that develops between the wall system and the foundation soil. The overturning failure mode considers the potential for the SRW to tip over due to the lateral pressures exerted on the back of the SRW system (Figures 5-3 and 5-4). Also, external to any structure, bearing capacity, settlement, and slope stability are additional concerns, as discussed in Section 5.3.5. For larger projects that have separate design professionals for civil, geotechnical, and wall design engineer contracts, the evaluation of bearing capacity, settlement and slope stability are generally considered the geotechnical engineer's responsibility.

5.3.2: Internal Stability

There are three modes of failure for internal stability of geosynthetic reinforced SRWs and one mode of failure for conventional SRWs. Internal stability analysis is considered the responsibility of the wall design engineer. Conventional SRWs must have enough internal shear capacity between SRW units to withstand lateral pressures without shearing failures occurring between units (Figure 5-3B). Geosynthetic reinforced SRWs must have adequate capacity to withstand lateral pressures so that sliding at any reinforcement layer does not occur. The reinforcement must have adequate strength so that rupture of the reinforcement is prevented and the length of the reinforcement must be sufficient enough to prevent pullout of the reinforcement from the reinforced soil mass (Figure 5-4B).

5.3.3: Facing Stability

For reinforced SRWs, the connection between the geosynthetic reinforcement and the SRW units must have adequate strength to prevent failure of the connection. In addition, the upper layer of reinforcement must be close enough to the top of the wall to preclude local overturning failure of the upper, unreinforced section of wall units (crest toppling) (Figure 5-4C).

5.3.4: Internal Compound Stability

For reinforced walls, internal compound stability (ICS) analysis is also evaluated for failure planes that begin behind a reinforced SRW and then pass through the internal structure of the wall system, exiting out the wall face. External stability analysis assumes the reinforced soil of a SRW behaves as a coherent mass against pressures from a failure wedge of soil directly behind the wall. Internal stability ensures reinforced mass is stable against internal stresses from a failure wedge within the reinforced soil. Neither of these stability analyses explicitly addresses circular failure planes starting behind the wall and passing through the weakest zones of the reinforced soil and wall face, if the reinforced mass is not designed with sufficient internal stability to act as a coherent mass against these failure planes. Internal compound stability analysis provides explicit evaluation of these potential compound failure planes.

The reinforced SRW's resistance to internal compound stability failure planes is a function of reinforcement length, strength, and vertical spacing; soil shear strength of the reinforced fill; and the shear strength between SRW units (Figure 5-4D).

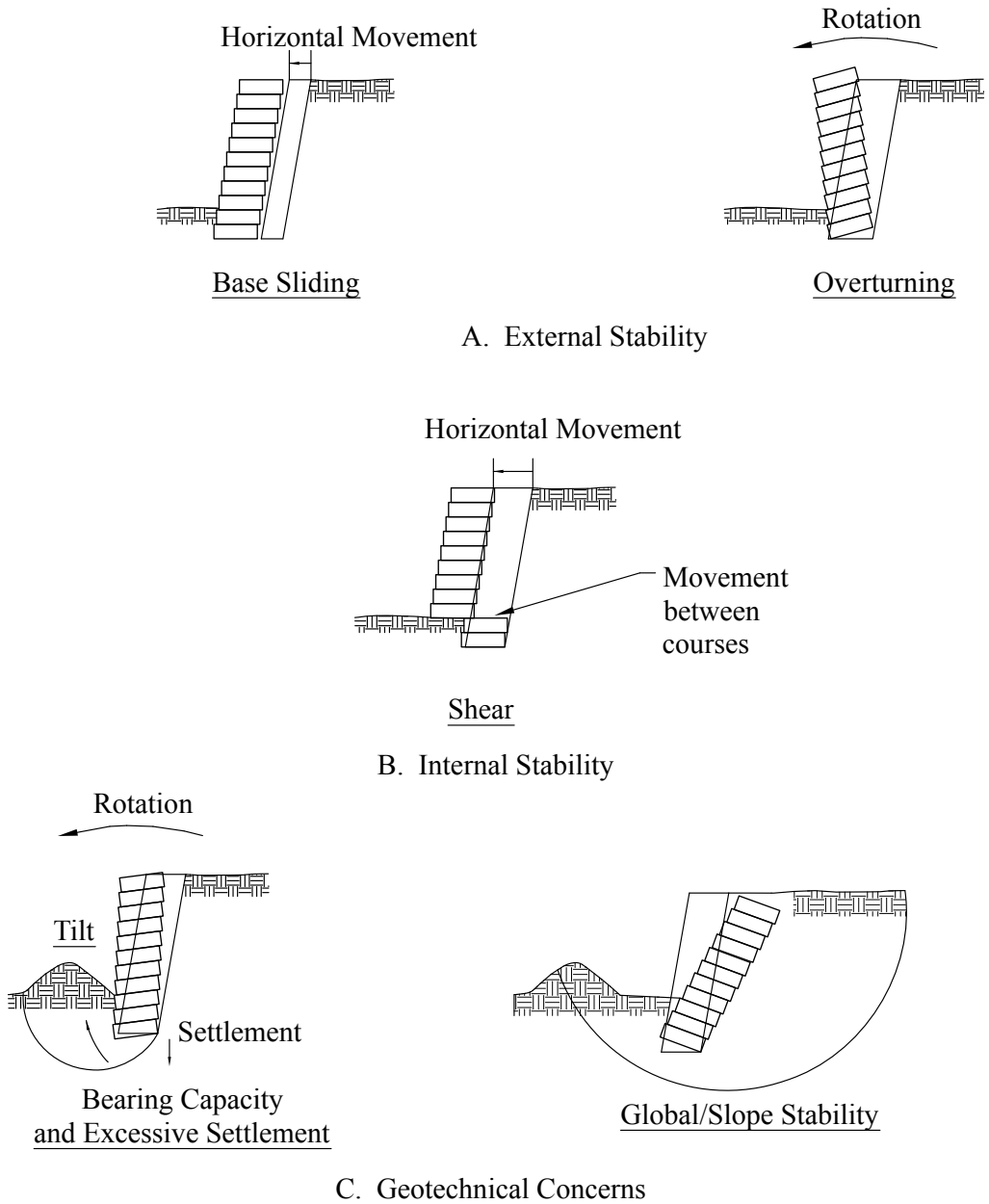

Figure 5-3: Main Modes of Failure for Conventional SRWs

ICS is evaluated by the method of slices, in a manner similar to slope stability methods, but differs from global analysis because ICS does not review deep-seated foundation stability below the SRW nor the stability of extensive slopes and loading conditions far behind the wall. Also, the geometry of the soil in front of the wall, such as a toe slope, is not addressed or accounted for in ICS. Instead, ICS simply evaluates the stability of the SRW against retained earth pressures directly behind the wall. ICS only considers compound failures planes that begin approximately twice the height behind the wall, and then pass through the reinforced soil mass and exit out the wall face, see Section 8.

5.3.5: Geotechnical Concerns

Both conventional and geosynthetic reinforced SRWs should have stable foundations that provide adequate bearing capacity and will not have detrimental settlement or global or deep seated instability. For reinforced SRWs, the

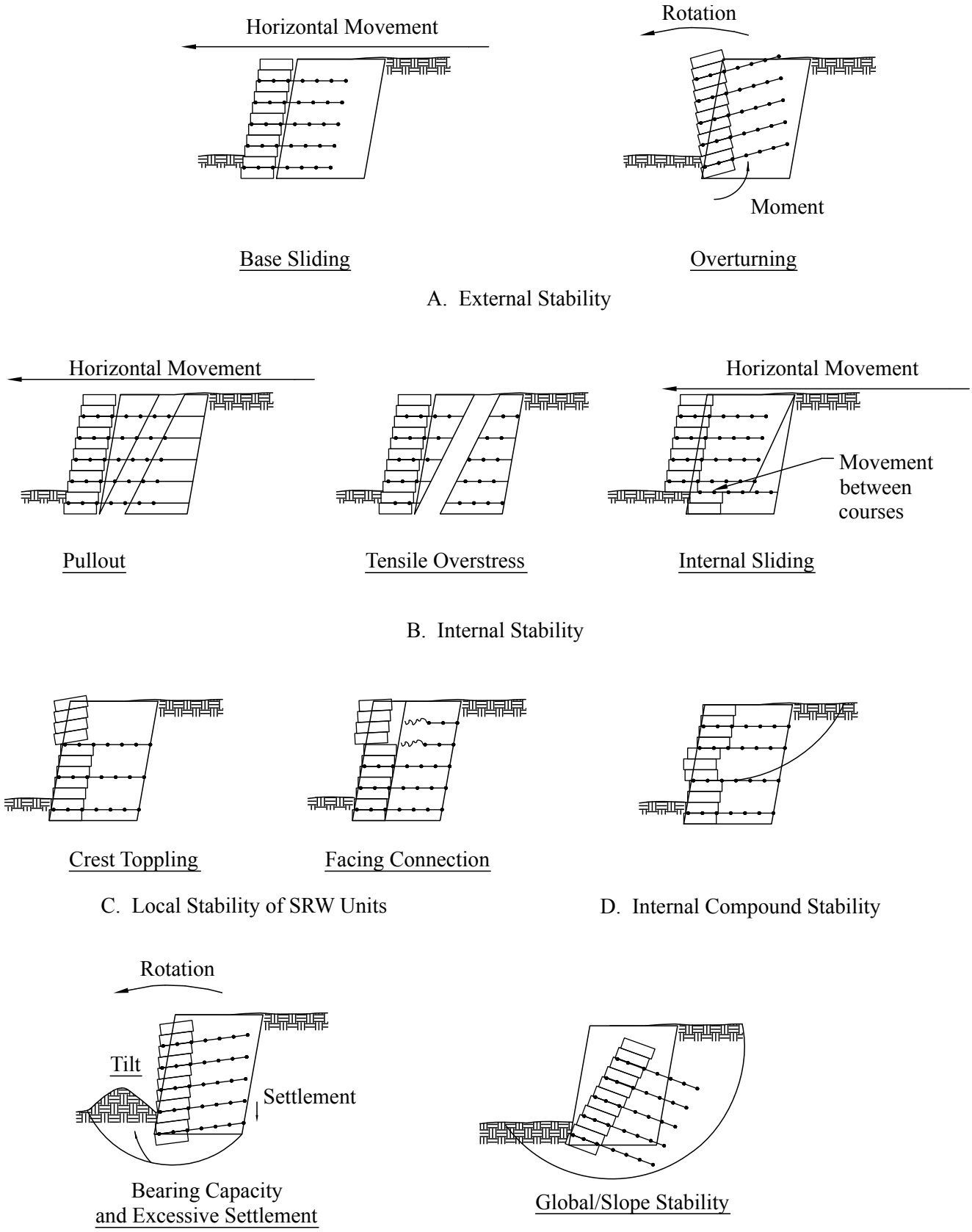

Figure 5-4: Main Modes of Failure for Reinforced-Soil SRWs

foundation soil under the entire reinforced wall system must be able to support the bearing pressures from the entire width of the reinforced soil mass, which will typically be slightly more than the self-weight of the soil fill. The wall design engineer should estimate the anticipated bearing pressures from the wall system while the geotechnical engineer will generally determine bearing capacity and estimated settlement of the foundation soils. The global stability around a SRW is a function of many factors including wall geometry, site grading, subsurface conditions, loading, and adjacent structures. Figures 5-3C and 5-4E show global stability failure modes. Typically, the geotechnical engineer is responsible for the global stability analysis for a project site, including around SRWs. Often a slope stability issue around a reinforced SRW can be addressed by increasing the length of the geosynthetic reinforcement. So the geotechnical engineer often will need to closely coordinate global stability corrections with the wall design engineer.

Section 5.4: Earth Pressure and Forces

Earth forces acting on conventional and reinforced soil SRW structures are calculated using Coulomb earth pressure theory when using the NCMA design methodology. Coulomb earth pressure theory has been adopted for the following reasons:

- The theory offers a consistent approach for all SRW types and is used for both internal and external stability analyses in reinforced soil segmental retaining wall structures.
- Geometry that includes a wall facing batter and backslope is included explicitly.
- Coulomb theory allows the influence of interface shear to be included in the calculation of earth pressures. Fully-mobilized interface shear can reduce the magnitude of earth forces developed behind SRW structures.
- A large body of empirical evidence is available in published literature that shows that Rankine active earth pressure theory over-estimates the internal forces acting on geosynthetic reinforced soil retaining walls [Refs. 31, 32, 33, 37, 42 and 43]. Furthermore, conventional Rankine theory cannot directly account for the typical condition of an inclined wall face and concrete-soil interface friction behind the facing units that is characteristic of segmental retaining wall structures, which tends to reduce applied earth pressure.

Coulomb theory assumes the soil adjacent to the sloped or vertical wall face is at a state of limiting equilibrium along a planar failure surface propagating from the heel of the wall into the retained soil mass. In other words, the soil is at a condition of incipient failure and the shear resistance (either *JK* internally or *MN* externally in Figure 5-5) is described by a Mohr-Coulomb failure criterion (Equation 2-1) using shear strength parameters ($c = 0$, $\phi > 0$), at every location on the failure surface (Figure 5-5).

The state of incipient collapse for the wedge of soil immediately behind the wall (either *IJK* for non-reinforced walls or *MNP* for reinforced walls, Figure 5-5) is assumed to be developed by a small outward movement (yielding) of the dry-stacked column of SRW units or the reinforced soil mass, respectively. The soil behind the wall is assumed to be in an "active state" due to outward movement of the wall with respect to the infill and/or retained soils. The active state represents the condition of the soil that gives the minimum possible lateral earth pressure on a retaining wall structure.

Based on classical soil mechanics principles, the soil in front of the wall may be assumed to be in a "passive state" where incipient failure of the soil in front of the wall (if any) has been caused by the outward movement of the SRW structure into the soil mass (i.e., lateral compression). The influence of passive earth pressures on the stability of reinforced and unreinforced SRW structures is conservatively ignored. The reason for this is the depth of the soil in front of the wall structure might not be present over the design life of the structure. In addition, neglecting passive earth pressure simplifies stability calculations while resulting in a structure that is marginally more conservative (i.e., slightly lower factors of safety for external failure modes than would be the case if passive earth pressures were considered).

NCMA Analytical Assumptions

1. P_s based on Coulomb earth pressure theory.
2. Wall friction δ_e=lower ϕ_i or ϕ_e; $\delta_i = 2/3\,\phi_i$
3. $P_{sH} = P_s \cos(\delta_e - \omega)$
   $P_{sV} = P_s \sin(\delta_e - \omega)$
4. P_a based on expanded structure height $(H + h)$
5. Active earth pressure P_s' for internal stability calculated in the same manner but based on structure height *(H)*.

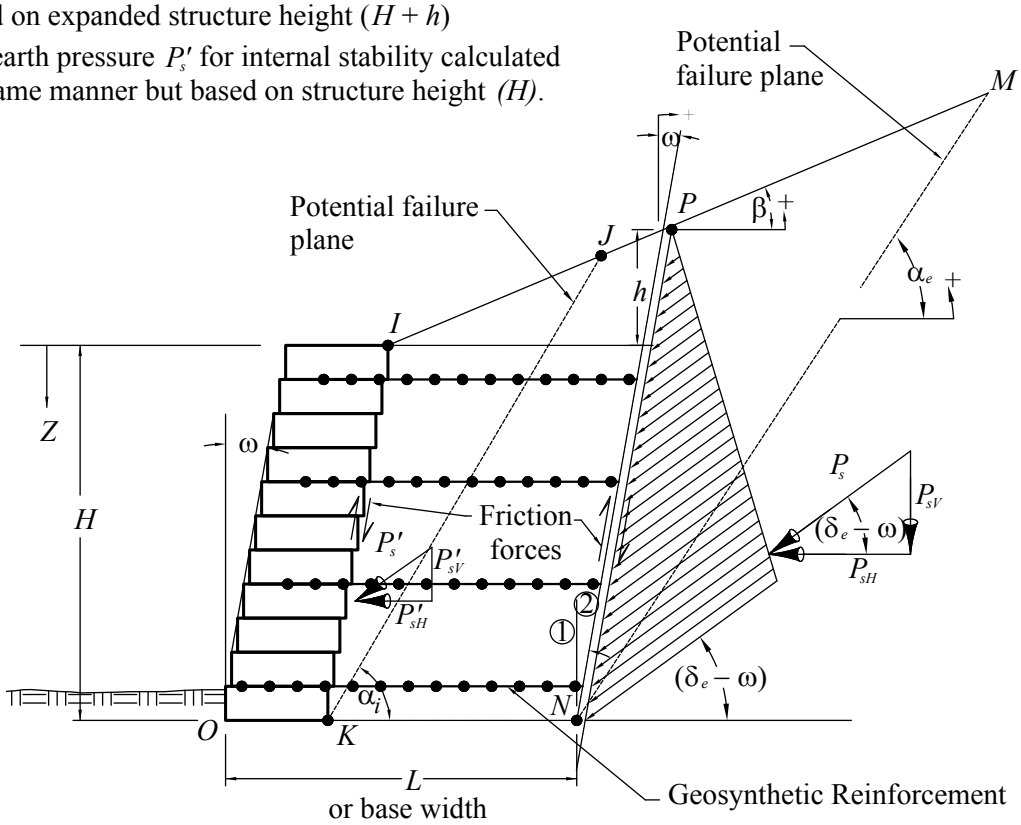

Note: ① Vertical wall face for external stability of multiple depth SRWs.
② Inclined wall face for external stability soil reinforced SRWs.

Figure 5-5: Earth Pressure Distribution and Force Resolution SRW Systems

Coulomb theory is used to relate the lateral earth pressure to vertical pressure for the "active" case as illustrated by the following expression:

$$\sigma_a = K_a \sigma_v \qquad \text{[Eq. 5-1]}$$

where:

σ_a	=	the lateral earth pressure for active state below the surface of the soil mass.
σ_v	=	the vertical pressure at depth z below the surface.
K_a	=	coefficient of active earth pressure.

The vertical pressure due to soil self-weight σ_v (commonly referred to as overburden pressure) at any location in SRW structures should be calculated as:

$$\sigma_v = \gamma z \qquad \text{[Eq. 5-2]}$$

where z is the depth below the surface of the soil mass (i.e., top of wall) and γ is the unit weight of soil.

In general, the orientation of the lateral active earth pressure calculated using Equation 5-1 is not horizontal but is included at an angle to the surface against which earth pressures act (Figure 5-5). The orientation of earth pressures and forces is discussed in the following section.

5.4.1: Active Earth Pressure Coeffecient

The coefficient of active earth pressure K_a is calculated as:

$$K_a = \frac{\cos^2(\phi+\omega)}{\cos^2\omega\cos(\omega-\delta)\left[1+\sqrt{\frac{\sin(\phi+\delta)\sin(\phi-\beta)}{\cos(\omega-\delta)\cos(\omega+\beta)}}\right]^2} \qquad \text{[Eq. 5-3]}$$

The quantity ϕ in this equation is the peak internal friction angle of the reinforced and/or retained soil, δ is the interface friction angle, and ω is the wall facing batter. The backslope angle (β) is taken with respect to the horizontal and is positive in a counter-clockwise direction (Figure 5-5).

The values for δ, β, and ϕ used in this equation will vary depending on type of wall (conventional or reinforced); and for reinforced walls, type of analysis (external or internal).

The calculation of coefficient K_a according to Equation 5-3 assumes that fully mobilized shear stresses may develop along the (interface) surface upon which active earth pressures act due to relative shear movement of the soil particles against the surface (*PN* and *IK*, Figure 5-5). The result of fully-mobilized interface shear is that active pressures will act at angle δ - ω with respect to the horizontal.

Conventional geotechnical engineering practice is to assume the relative soil movement is downward for the active earth pressure condition and consequently the angle α has a positive (counter-clockwise) orientation as illustrated in Figure 5-5.

For the case of a horizontal backslope (β = 0, δ = 0) and a vertical wall surface (ω = 0), the coefficient of active earth pressure becomes:

$$K_a = \frac{1-\sin\phi}{1+\sin\phi} \qquad \text{[Eq. 5-4]}$$

These equations are restricted to $\beta < \phi$, which in practical terms avoids the possibility of translational failure of the soils above the top of wall. The sign convention adopted in this manual is that the facing angle (ω) is taken with respect to the vertical and is positive in a clockwise direction (i.e., rotation into wall fill soils, Figure 5-5).

5.4.2: Failure Surface Orientation, α

The orientation (α) of the critical Coulomb failure surface with respect to the horizontal may be determined generally using Equation 5-5 [Ref. 23]. The δ, β, and ϕ used in this equation will vary depending on type of wall (conventional or reinforced); and for reinforced walls, type of analysis (external or internal). Specific calculations of α for each of these cases are provided in Sections 6 and 7.

$$\tan(\alpha-\phi) = \frac{-\tan(\phi-\beta)+\sqrt{\tan(\phi-\beta)\left[\tan(\phi-\beta)+\cot(\phi+\omega)\right]\left[1+\tan(\delta-\omega)\cot(\phi+\omega)\right]}}{1+\tan(\delta-\omega)\left[\tan(\phi-\beta)+\cot(\phi+\omega)\right]} \qquad \text{[Eq. 5-5]}$$

The evaluation of anchorage capacity is important to maintaining a monolithic gravity mass in the tied-back wedge (see *IJK*, Figure 5-5) method of analysis.

For the case of a horizontal backslope $\beta = 0$, $\delta = 0$ and a vertical wall surface $\omega = 0$ the orientation of the critical failure surface reduces to the Rankine solution:

$$\alpha = 45 + \phi/2 \qquad \text{[Eq. 5-6]}$$

5.4.3: Interface Friction Angle, δ

Movement between masses along a surface generates shear stresses due to friction. Incorporation of these friction forces in determining the Coulomb active earth pressure and orientation of earth forces has been illustrated above and represented as a friction angle, δ. Determination of this friction angle can be done by either field or laboratory testing. Such testing, however, is often cost prohibitive and the interface friction angles can be estimated from literature [Refs. 12, 17 and 23]. The value of δ will vary depending on wall type (conventional or reinforced) or type of analysis for reinforced wall (external or internal). Generally, δ is a function of the friction angle of the soil(s) acting at the interface of the calculated earth pressures and the portion of the wall those earth forces are acting on. Calculations of δ for specific cases (δ_c, δ_e and δ_i) are provided in Sections 6 and 7.

The basis for incorporation of δ is to accurately reflect the earth force magnitude and orientation. To ensure this assumption is correct and the analytical approach presented in this manual is applicable, the requirement that $\omega < \delta$ must be met. In addition, the requirement that ω must be less than 20° ($\omega < 20°$) generally insures the requirement is met for most soils.

5.4.4: Horizontal and Vertical Components

The earth pressures act an angle as shown in Figure 5-5 so these pressures are broken into horizontal and vertical components for calculation of forces acting on the wall. The portion of forces for each component is determined by multiplying by the following factors:

horizontal components	$\cos(\delta - \omega)$
vertical components	$\sin(\delta - \omega)$

The horizontal components of earth forces destabilize walls while the vertical components stabilize. As a conservative, simplifying assumption, this methodology ignores vertical components in the internal stability analysis of reinforced walls but calculates both horizontal and vertical components for the external analysis of conventional and reinforced walls. Accounting for both the horizontal and vertical components provides the most complete analysis. Also, the consideration of vertical components can significantly improve sliding and overturning stability results. This allows a reduction of base geogrid lengths, which is particularly prominent when a backslope is present at top of wall.

The wall designer and geotechnical engineer should be aware of the additional geotechnical stability issues that may arise for SRWs with narrower reinforced base widths when accounting for vertical components. These length reductions may often be later over-ridden by a length increases required to address global stability around the SRW. Neglecting the vertical load components in the wall design, however, should never be construed as automatically satisfying all global stability issues around an SRW, even in simple geometries. Just as with any type of planned structure or retaining wall, the subsurface conditions around a SRW should be evaluated by means of a geotechnical investigation to determine if the foundation and global stability is sufficient.

Section 5.5: Design Height and Embedment

Determining the design height of a SRW and the consequent forces over that wall height involve two factors: the exposed height H' of the planned grade change and the amount of wall embedment H_{emb}. With these, the wall design engineer can determine a design height.

5.5.1: Design Height for SRWs

The design wall height H for a SRW is the total wall height measured vertically from the wall base (bottom of units, top of leveling pad) to the finished grade at the top of the wall. The design height H includes the exposed height H' above finish grade and the wall embedment (H_{emb}) below finish grade. As discussed in Section 4, the wall profile generated from a grading plan provides the proposed exposed height H' and the wall embedment H_{emb} is determined as discussed below in Section 5.5.2. In this manual, the earth forces loading a wall are calculated over the total wall height H, essentially ignoring any stability the wall embedment might provide. This conservatively ignores any passive resistance forces from the soil in front of the wall.

Beyond a conservative simplification, the purpose of designing with the total height H for SRWs is to avoid relying on the lateral support of the soil in front of the wall given it sometimes may not be present for the life of the structure. This may be a particular concern for transportation related retaining walls where paving reconstruction and/or excavation may occur near the bottom of the wall.

5.5.2: Embedment Requirements

The suggested amount of embedment varies with wall height and site conditions. The minimum wall embedment H_{emb} shall be measured vertically and determined according to Table 5-1.

Although the primary benefit of wall embedment is enhanced stability, the depth of embedment should be increased whenever any of the following special conditions occur:

- Large settlement potential or weak bearing capacity of underlying soils
- Steep slopes near or below the toe of the wall
- Potential scour at the toe of the wall in waterfront and submerged wall applications
- The maximum depth of seasonal soil volume change extends below the bearing pad
- Seismically active location

The influence of these conditions on wall performance should be addressed by a qualified geotechnical engineer familiar with the site soil and groundwater conditions. In particular, steep slopes beyond the toe of the wall will likely create bearing and global/overall slope instability that the increased embedment in Table 5-1 will **not** address. Other strategies for addressing general foundation and global stability beneath a SRW are discussed in Section 12.

Table 5-1: Minimum Wall Embedment Depth, H_{emb}

Slope in Front of Wall	Minimum H_{emb} to Top of Leveling Pad
Horizontal (walls)	H′/20
Horizontal (abutments)	H′/10
3H:1V	H′/10
2H:1V	H′/7
Minimum Embedment	0.5 ft (152 mm)

Note: H' is the exposed height of the SRW.

In the case of increased embedment needed to address scour or erosion concerns, the project civil engineer or a specialized hydrology engineer may be needed to provide estimated scour depth so the bottom of the wall can be extended below this depth. See Section 11 for further discussion of civil engineering issues around SRWs.

Generally, the wall embedment depth (H_{emb}) does not need to extend below seasonal frost depths or other seasonal volume changes. SRWs supported on flexible granular leveling pads can accommodate movement caused by freeze/thaw cycles. The mortarless segmental units are free to move slightly in relation to each other without distress to the wall structure.

If groundwater and frost susceptible soils are present at the wall base, particularly soils subject to formation of ice lenses, localized movement can be prevented by increasing the thickness of the leveling pad aggregate beyond the minimum 6 in. (152 mm). Effectively, this can extend embedment of the wall foundation beneath the frost line without unnecessarily increasing the design wall height (H) used for stability analysis. This also isolates the foundation drain pipes from freezing. Similarly, a moisture barrier outside the toe of the wall can prevent moisture migration and thereby minimize soil volume changes.

Foundation soils susceptible to shrinking/swelling during seasonal moisture fluctuations can be addressed, at least partially, with the similar increases to embedment or depth of the leveling as suggested for frost susceptible soils.

Section 5.6: Top of Wall Conditions

The presence of slopes or additional loads at the top of a retaining wall can greatly increase the lateral earth pressures exerted on the wall and should be accounted for accurately.

5.6.1: Infinite Slopes

Slopes that extend continuously behind a wall are considered infinite slopes. Steep, continuous slopes can nearly double the lateral earth pressures on a retaining wall. The increase in earth pressure on a SRW is accounted for in the calculation of the active earth pressure coefficient K_a, which varies with β. As explained in Section 5.4.1 Active Earth Pressure cofficient, an infinite slope behind a SRW cannot exceed the friction angle of the soil within the slope. This avoids the possibility of translational failure of the soils above the top of wall. In some cases with extensive slopes that continue far beyond the back of the SRW system, **the stability of the top slope itself may be a concern**, irrespective of the wall below it. The stability of such extensive slopes should be evaluated by the project geotechnical engineer.

5.6.2: Broken Backslopes

Slopes that crest and level off within the influence distance behind a wall will exert less load on a wall than an infinite slope. The impact of such a broken backslope on the reduction of active earth pressures will vary with conditions. In this manual, a continuous, equivalent slope angle (β') is calculated to approximate the earth pressure effect of the actual geometry of the broken slope on the wall system. Determining the zone of influence distance behind a wall, at which a break in a slope still matters, varies with type of wall (conventional or reinforced) and, for reinforced walls, with type of analysis (external or internal). The method for determining the equivalent slope to represent the broken slope also varies with type of wall and analysis. If a broken slope crests beyond the horizontal distance of influence behind the wall, it is treated as an infinite slope.

The calculation of the coefficient of active earth pressure (K_a) and the failure plane (α) are modified in the case of a broken slope using the equivalent slope β' in the place of β. The means of determining this equivalent β' for each specific type of analysis (β_{con}, β_{ext} and β_{int}) is provided in Sections 6 and 7.

When checking ICS, because this design model explicity considers the actual geometry of a broken slope, ICS does not need an estimated equivalent slope.

5.6.3: Surcharge Loading

Generally, any surcharge loads located behind the wall within a distance of twice the wall height are considered to load the wall. The specific zone of influence of a surcharge will vary with site and soil conditions. The SRW design engineer should determine whether a surcharge is close enough to the SRW to be influencing it. In complicated geometries, a global analysis of the whole site geometry, including surcharges, by the project geotechnical engineer may be needed to accurately evaluate the influence of surcharges. In this manual, for simplification purposes, any surcharges applied by the design engineer are simply modeled as uniform loads extending infinitely behind the wall.

5.6.3.1: Live and Dead Loads

When defining surcharge loadings, it is important to distinguish between live load (q_l) and dead load (q_d) surcharges. Live surcharge loadings q_l are considered to be transient loadings that may change in magnitude and may not be continuously present over the service life of the structure. In this manual, live surcharge loadings are considered to contribute to destabilizing forces only, with no contributing forces that act to stabilize the structure against external or internal failure modes. Examples of live load surcharges are vehicular traffic and bulk material storage facilities.

Dead load surcharges (q_d) on the other hand, are generally considered to contribute to both destabilizing and stabilizing forces since they are usually of constant magnitude and present for the life of the structure. The weights of a building or another retaining wall (above and set back from the top of the wall) are examples of dead load surcharges.

5.6.3.2: Modeling as Uniform

As a conservative simplification, applied surcharges considered in this manual are simply treated as uniform loads, starting at the back of the wall units and extending continuously behind the wall (with the exception noted below in Section 5.6.3.3). Whether a load is close enough to influence a SRW and thus, whether the surcharge should be present or absent in the analysis is to be determined by the SRW design engineer prior to beginning the wall design. In this manual, uniform surcharge loading (q) is used to model routine static weight loadings distributed at or above the crest of the wall. A dead load surcharge (q_d) could be caused by tiered retaining walls, buildings, storage tanks or outdoor bulk storage, etc. Uniform surcharges are also routinely used to approximate live surcharge loadings (q_l) such as dynamic loading due to vehicular traffic on pavements. Common live surcharge uniform magnitudes for pavement loading are:

q_l = 100 psf (4.70 kPa) - car and light truck traffic
q_l = 250 psf (11.975 kPa) - tractor trailer traffic or fire lanes, highway loadings

5.6.3.3: Offset Surcharges

For most calculations, surcharges are treated as uniform, infinite loads starting immediately at the back of the wall units. For reinforced walls that have setback surcharges on level surfaces, however, the effect of this offset is accounted for in the facial stability calculations. Section 7.6.3 shows how an offset surcharge is eliminated from facial loads for SRW units above the influence zone of the offset surcharge.

Only the offset of surcharges on a level grade, on a level top of wall, or the level portion of a broken slope are considered as offset for purposes of this manual's calculations. For the sloped portion of a broken slope or for an infinite backslope, any offset on the slope is ignored and the surcharge is treated as an infinite uniform surcharge starting at the back wall face. Because ICS analysis can specifically analyze actual wall conditions and geometry, the offset of a uniform surcharge on a level surface is also accounted for in the ICS method in this manual. Any offset of a surcharge is ignored for all other analysis, such as when checking external and internal stability of reinforced SRWs, with the surcharge treated in those calculations as starting at the back of the wall units.

A dead load that is offset far enough behind a wall may no longer contribute to the resisting forces as is typically assumed. Therefore, for reinforced walls, a dead load surcharge that is setback beyond the internal failure plane or beyond the reinforced zone is treated essentially as a live load and is not considered to contribute to any resisting forces in the external, internal or local stability calculations. Even when an offset dead load is close enough to the wall face to be considered contributing to the resisting forces, the stabilizing effects are only considered for the portions of the minimum geosynthetic length (L) that have the dead load directly over them, as detailed in Section 7.4.1.2.

5.6.3.4: Line Loads or Point Loads

The influence of line or point loads applied to the surface behind the crest of a SRW are not specifically addressed in this manual but could be incorporated into this analytical method. Line or point loads may result from heavy isolated footings or continuous footings constructed in close proximity to the crest of the wall. The reader should refer to References 1, 4, 6, 9, 12 and 19 for details on the calculation of the influence of these concentrated loadings.

5.6.3.5: Tiers as Surcharges

Tiered or terraced walls can place significant surcharges on the lower wall if the upper tiers are not setback far enough to remove their influence. The influence of some simple tiered wall cases, such as one upper tier with level grades at top and bottom of the walls, usually can be conservatively approximated by applying the bearing pressure load of the upper tier as a uniform live load. This method accounts for the destabilizing effect of the upper tier and while conservatively ignoring the stabilizing effect the upper tier load may or may not have on the lower wall. In some cases, this may be an overly conservative and more involved analysis can provide a more accurate result, as described in Section 5.9.2.

Section 5.7: Water and Drainage

Water can increase loads on wall, be a source of scour or erosion, or decrease stability of soils around a SRW. As a general design approach, it is considered preferable, whenever possible, to keep water away from retaining walls and provide adequate drainage structures in and around walls to avoid build-up of hydrostatic pressure on walls.

The stability calculations presented in Section 6 and 7 assume that adequate surface and subsurface drainage has been provided in and around the wall to evacuate any water before it can build up pressure on the wall or cause erosion or scour to the wall. Thus, this design method assumes there is no hydrostatic pressure on the wall in these stability calculations. These calculations also assume the groundwater table is located well below the base of the wall (i.e., greater than 0.66H, where H is the height of the wall). Hence, all stresses are computed as total stresses and do not have to be modified for the influence of pore water pressure. In addition, the destabilizing effect of hydrostatic pressures or seepage forces is not a concern when the groundwater table is at this depth.

Details on handling surface water and groundwater and the design of appropriate surface and subsurface drainage to ensure water conditions meet this methodology's assumption that no hydrostatic pressures are present on the wall are presented in Sections 10, 11, and 12. Section 10 discuss drainage design within and directly around SRWs for wall designers guidance while Sections 11 and 12 discuss surface and subsurface drainage considerations for civil and geotechnical engineers, respectively.

A brief overview of some of the effects of water on walls that should be considered by design professionals are:

- **Surface Water**—improper collection and flow of surface drainage can direct excessive amounts of water towards a SRW and cause erosion or over-loading of wall. Section 11 discusses considerations for the site civil engineer to minimize surface water issues around a SRW.
- **Groundwater/subsurface water**—Groundwater can weaken foundation soils supporting a wall and can increase external loads on a wall. See discussion in Sections 10 and 12 for subsurface water considerations for the SRW design engineer and geotechnical engineer.

- **Subsurface drainage materials within walls and around walls**—Whenever practical to avoid hydrostatic pressures, SRWs should be designed with sufficient drainage materials within and directly behind and below them, such as: gravel fill, drainage pipe, composite drainage mats and filter fabric, as discussed in Section 10.
- **Water bodies in front of walls**—SRWs along a body of water such as a lake shoreline, river or stream channel, or detention/retention ponds present several special considerations including:
    - rapid draw down pressures
    - scour
    - fines migration
    - foundation concerns
    - ice

These design considerations are covered in Section 10.5.

Section 5.8: Seismic Analysis

Properly designed reinforced SRWs subjected to seismic and/or dynamic loading will, in general perform well due to their flexible nature and enhanced ductility. When a SRW is requires seismic analysis, that evaluation should be done in an analysis separate from static methods, as outlined in Section 9 Seismic Design of Segmental Walls.

SRWs in seismically active zones may be subjected to both dynamic increment earth forces and inertial forces caused by the wall mass itself. The dynamic force is typically modeled as a pseudo-static load, in addition to the standard static loads. Because seismic events are short-term, some lower design requirements such as lower factors of safety are allowed for seismic analyses. Given such differences from static analyses, SRW seismic stability must be evaluated in an independent, separate analysis. However, most of resisting forces for the seismic analysis in Section 9 are the same as calculated in Sections 6 and 7.

It is important to note that a SRW seismic analysis must be performed in addition to, not in lieu, of the static analysis. Seismic analysis is not just a static analysis with higher loads; seismic analyses have lower minimum factors of safety, ignore live loads, and allow for higher geogrid design strengths compared to static analyses. Because of these differences, an engineer could satisfy seismic requirements in the seismic Section 9 while, incorrectly, not meeting the static requirements of Section 6 and 7. So both seismic and static analyses must be performed separately, with the final wall design layout providing sufficient factors of safeties for both the seismic and static cases, independently.

Section 5.9: Special Conditions

There are many conditions that may be present around a SRW that effect the stability of the SRW that are not specifically addressed in the standard wall design methods outlined in Sections 6 and 7. The owner or owner's representative and design professionals on a project involving a SRW should give these special conditions careful review to ensure they are considered and addressed by the appropriate design professional(s). A few of the more commonly encountered special considerations are reviewed here.

5.9.1: Tall Walls

Taller walls often have special concerns that are not significant issues for shorter walls. Given their height, taller walls will influence and be influenced by a much larger portion of a site, so project design professional(s) must pay careful attention to site conditions well beyond the location of the SRW wall face and well below the SRW system. Layout issues, such as the wall batter and geosynthetic reinforcement lengths become more significant with tall walls that lose more space and need more space for longer reinforcement lengths, as discussed in Section 4.

One of the primary structural concerns for taller walls is the post-construction settlement of the reinforced soil (infill). Even well-compacted, high-quality granular backfill will experience some post-construction settlement. Even if the

percentage of backfill settlement to fill height is less than one percent, this can yield significant settlement in a 30, 40 or 50 ft (9.14, 12.19 or 15.24 m) high wall. Total settlement of wall backfill is an issue for the performance of any top of wall structures such as pavements. Also, the possible differential settlement between the wall face, which is made of uncompressible concrete SRW units, and the wall backfill soils also is an issue for taller walls because the differential settlement increases with height. The backfill, and the geosynthetic layers within the fill, may be pulled down relative to the SRW units due to this differential settlement, possibly causing damage to the geosynthetic or overloading of the SRW unit-geosynthetic connection.

Design professionals' typical strategies to address these settlement issues for taller walls may include:

- Increasing the relative density compaction requirements to 95 percent Modified Proctor or 98 percent Standard Proctor.
- Encouraging higher levels of consistent compaction quality, including higher levels of quality control and quality assurance. More frequent compaction testing may be needed than for shorter walls. Installation practices that provide adequate performance in shorter walls, such as providing little compaction of the gravel fill or not strictly adhering to leveling and alignment tolerances, may need to be specifically addressed and improved to insure acceptable results for taller walls.
- Thickening the minimum width of the gravel fill behind the SRW unit face up to to 3 ft (1 m) to assist in graduating any differential settlement between the units and the reinforced backfill soils. Sometimes the thickness of the gravel fill is also graduated throughout the wall height. For example, for a 45 ft (13.7 m) wall the gravel fill may be 3 ft (1 m) thick gravel fill for the bottom 15 ft (4.5 m) of wall, 24 in. (610 mm) thick for the middle 15 ft (4.5 m) of wall, and one foot (305 mm) thick for the top 15 ft (4.5 m) of the wall.
- Decreasing the plasticity index of the fine fraction of the backill soils down to PI < 5 to 10.
- Requiring select granular backfill in the reinforced zone that has no more than 5 to 15% fines.
- Providing special attention to internal and surface drainage.
- Breaking a single tall wall into two tiered walls with the upper wall set back no more than a few feet. This does not significantly change the loads on the walls or the reinforcement requirements but it does allow the wall contractor an opportunity to reset the wall face alignment and reduces the differential settlement between the upper SRW units and the wall backfill.

Whether any or all of the suggestions are needed, as well what value in these criteria ranges should be used, depends on the height of the wall, the on-site soil and fill soil types available, the accuracy of the site and materials data, local experience, anticipated quality control of installation, and the wall design engineer's and project geotechnical engineer's judgment. As an example of the range of judgment, taller walls backfilled with on-site, fine-grained soils are commonly successful in some regions, while in other regions the native soils properties make fine-grained soils unsuitable as fill for even 10 ft (3.05 m) high walls.

5.9.2: Tiered Walls

Tiered walls often require more complex analysis than provided by standard wall stability design methods. Some simpler cases, however, may be conservatively modeled by the following method.

The effect of the upper tier walls is to act as a uniformly distributed load on the underlying tiers. Generally, if a tiered retaining wall is placed within a horizontal distance (wall face to wall face) less than twice the height of the underlying wall, a load will be applied to the lower wall. This 2V:1H rule assumes that there are no slopes below, between or above the tiered structures and that there are reasonably competent soils. Figure 5-6 may be used to estimate the equivalent uniformly distributed surcharge loading applied to a lower wall by the upper wall for both internal and external stability analyses of a tiered reinforced soil SRW system. If the upper tier is setback past the reinforced zone of the lower wall, however, it may behave more like a live load than a dead load because the vertical load of the upper wall is not contributing to stabilizing forces in the lower wall.

To determine approximate surcharge of upper wall 2 on lower wall 1, implement the following steps by iterative process:

1. Estimate base lenght L_1, and calculate external failure angle, $\alpha_{e(1)}$
2. Calculate q_{l1}, and q_{d1}, based upon L_1
3. Calculate actual L_1 based upon external stability analysis using q_{l1} and q_{d1} from step 2.
4. If calculated L_1(step 3) < estimated L_1(step 1), OK. If not, repeat steps 1-4.
5. Check global/overall stabilty of final geometric configuation.

J = Horizontal distance from wall face to wall face

L = Base length of geosynthetic reinforcement for soil reinforced SRWs and base width of conventional SRWs

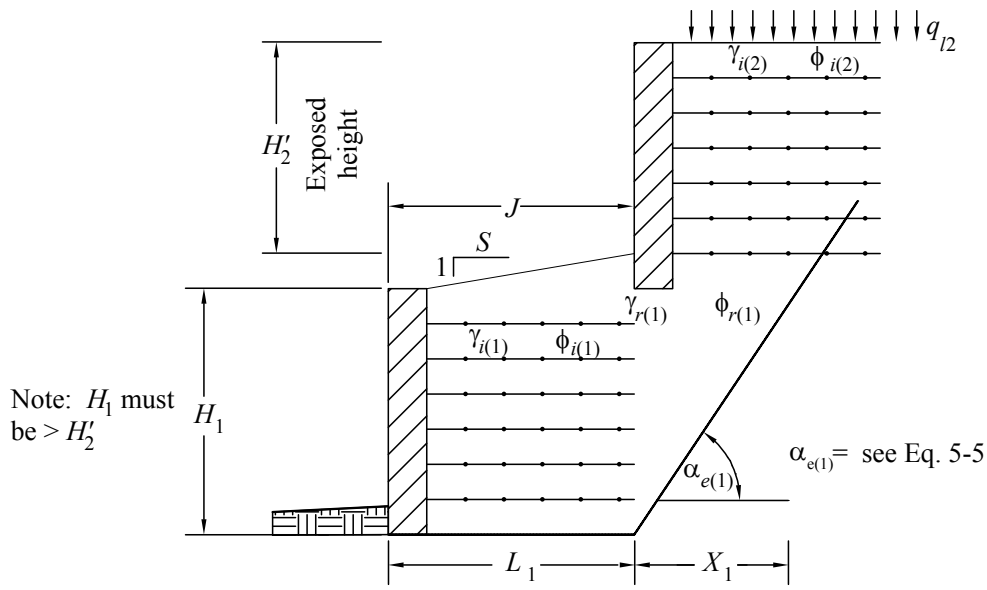

$X_1 = (H_1 + J/S)/\tan \alpha_{e(1)}$
S = 500 for flat (level) backfill between walls

For internal stability wall 1:

when $J \geq L_1$ — No influence: $q_{l1} = 0$ $q_{d1} = 0$

$0.3L_1 < J < L_1$ — Use percentage of surcharge:

$$q_{d1} = \frac{(L_1 - J)}{L_1}(\gamma_{i(2)} H_2') \qquad q_{l1} = \frac{(L_1 - J)}{L_1}(q_{l2})$$

$J \leq 0.3\ L_1$ — Use full surcharge:

$$q_{d1} = \gamma_{i(2)} H_2' \qquad q_{l1} = q_{l2}$$

For external stability wall 1:

when $J \geq (L_1 + X_1)$ — No influence: $q_{l1} = 0$ $q_{d1} = 0$

$(L_1 + 0.5X_1) < J < (L_1 + X_1)$ — Use percentage of surcharge:

$$q_{d1} = \frac{(L_1 + X_1 - J)}{X_1}(\gamma_{i(2)} H_2') \qquad q_{l1} = \frac{(L_1 + X_1 - J)}{X_1}(q_{l2})$$

$J \leq (L_1 + 0.5X_1)$ — Use full surcharge:

$$q_{d1} = \gamma_{i(2)} H_2' \qquad q_{l1} = q_{l2}$$

Note: $0.3L_1$ and $0.5X_1$ are arbitrary but empirically based geometric limits to ensure a conservative surcharge approximation

Figure 5-6: Surcharge Approximation for Tiered Walls

This method does not, however, account accurately for the effects of slope around or between tiered walls. The only way to accurately model tiers and adjacent slopes is to use conventional slope/global stability analysis methods. The retaining wall designer and the site geotechnical engineer must work together to ensure that all modes of failure are investigated for these complex structures. For further discussion of how to model SRWs for slope stability analysis, see Section 12.4 *Global Stability Around SRWs*.

The same approach as shown in Figure 5-6 is suggested for conventional gravity SRWs except that the dimension L_1 in the figure is restricted to the base width of the SRW units (W_u). In both instances, the lower wall height H_1', must be greater than the exposed height H_2' of the upper wall to use the approximation in Figure 5-6. The approximation is also applicable to triple and quadruple tiered wall systems by starting the analysis at the lowermost wall. The information that is required to analyze the effects of tiered SRWs is the geometric location of one tier with respect to the other (i.e., H_1, L_1, and J from Figure 5-6).

5.9.3: Sloping Toe Concerns

The grade at the toe of a SRW has a substantial effect on the stability of a SRW with respect to bearing capacity and global stability. When the grade at the toe of the wall slopes away from the wall face, the bearing capacity and global stability are reduced when compared to the same structure with a level grade at the toe of the wall. This reduction in stability is directly related to the reduction in the shear resistance along the failure surface and the reduction in the weight of soil stabilizing the structure. If the groundwater is elevated at the toe of the wall, global stability of the structure may be further compromised. The standard wall design methods outlined in Sections 6, 7 and 8 (conventional, reinforced, and ICS) do not account for destabilizing effects of a toe slope on a SRW. The project geotechnical engineer should evaluate the effects of a toe slope on bearing capacity and slope stability around a SRW as described in Section 12.

5.9.4: Foundation Stability

As with any structure, SRWs must be supported by foundation materials with sufficient capacity against the loads of the structure and that are adequate enough to avoid excessive settlement beneath the SRW. Sections 6 and 7 describe methods of estimating bearing pressures from SRWs and Section 12 describes geotechnical methods to estimate bearing capacity beneath a SRW.

5.9.5: Global Stability

The overall stability of the soils surrounding a SRW should be evaluated to ensure global stability of the planned SRW and surrounding grading and structures. Often the SRW is just a portion of overall site conditions such as slopes, other structures, and detention ponds, which all influence the overall slope stability of a planned project. Section 12 provides a general overview of how a global stability analysis that includes a SRW can be evaluated by a geotechnical engineer.

Section 5.10: Recommended Minimum Factors of Safety and Design Criteria

Selection of appropriate factors of safety should be based on the certainty with which design parameters and the consequences of failure are known and standard accepted engineering practice. Table 5-2 lists the recommended minimum safety factors for the internal and external stability failure modes for reinforced SRWs [Ref. 59]. Table 5-2 also provides additional applicable design criteria beyond these Factors of Safety for soil-reinforced SRWs.

5.10.1: Maximum Vertical Spacing of Geogrid

It is often cost efficient, from a reinforcement materials perspective, to maximize vertical spacing between geogrid layers. However, even when all Factors of Safety are satisfied for internal stability, facial stability and internal compound stability, limiting maximum vertical spacing between layers to 24 in. (610 mm) is suggested to minimize construction stability issues. Some proprietary systems are capable of supporting larger spacing between

reinforcement layers, however, the reinforcement spacing should not exceed 32 in. (813 mm). The wall designer should choose an appropriate maximum reinforcement spacing for the proprietary system used in the design. For modular blocks that are less than or equal to 10 in. (254 mm) in depth, it is recommended that the maximum vertical spacing of the reinforcement layers be no more than twice the depth of the unit. Reguardless of the spacing of the reinforcement, compaction of the reinforced backfill/retained soil must never exceed 8 in. (203 mm) in thickness.

5.10.2: Minimum Geogrid Length

In this manual, a minimum length of reinforcement to height of wall ratio (L/H) of 0.6 has been established. For most cases, depending on soil shear strength characteristics, this value is sufficient to meet internal and external requirements. When a backslope and/or toe slope is present, or an extra-ordinary loading condition exists, frequently the L/H ratio of 0.6 does not satisfy minimum factors of safety. It is not uncommon for L/H ratio to exceed 1.0 for a wall with a 2H:1V backslope. Internal Compound Stability analysis in this manual will go a long way to prevent inadequate reinforcement lengths, however, this does not replace the need to carry out a full global stability analysis. In addition, it is recommended that the absolute minimum value for L be 4 ft (1.2 m).

5.10.3: Maximum Wall Height

The design and construction of retaining walls in excess of 50 ft (15.24 m) have become more common. Terraced and single-height retaining walls in excess of this height have also been constructed.

While there is no theoretical maximum height for a properly designed geosynthetic-reinforced SRW there are some practical concerns with taller walls as discussed in Sections 4.4 and 5.9.1 that should be addressed.

5.10.4: Factors of Safety and Design Criteria Summary

Table 5-2: Recommended Minimum Factors of Safety and Design Criteria for Conventional/ Reinforced SRWs (1, 2, 3, and 4)

Failure Modes		Static	Seismic
Wall Design			
Base Sliding	FS_{sl}	1.5	1.1
Overturning	FS_{ot}	1.5/2.0	1.1
Internal Sliding	$FS_{sc}/FS_{sl(i)}$	1.5	1.1
Tensile Overstress	FS_{to}	1.5	1.1
Pullout	FS_{po}	1.5	1.1
Connection	FS_{cs}	1.5	1.1
Internal Compound Stability	F_{com}	1.3	1.1
Geotechnical Concerns			
Bearing Capacity	FS_{bc}	2.0	1.5
Global Stability	FS_{gl}	1.3-1.5	1.1
Other Wall Design Criteria			
Minimum Reinforced Zone Width	L	$0.6H$ (5)	
Minimum Wall Embedment	H_{emb}	0.5 ft (152 mm) (6)	
Minimum Anchorage Length	L_a	1.0 ft (305 mm)	
Maximum Wall Batter	w	20 degrees	

NOTES:
1. The minimum factors of safety given in this table assume that stability calculations are based on measured site-specific soil/wall data. Measured data are defined as the results of tests carried out on actual samples of soils and geosynthetic products at the proposed structure and actual samples of masonry concrete units (i.e., the same molds, forms, mix design and infill material or same broad soil classification type (e.g. G, S, if applicable).
2. When estimated data is used, the designer may need to use larger factors of safety than those shown in this table or conservative estimates of parameter values. Estimated data includes bulk unit weight and shear strength properties taken from the results of ASTM methods of testing (or similar protocols) carried out on samples of soil having the same USCS classification as the project soil and the same geosynthetic product.
3. Estimated data for facing shear capacity and connection capacity analyses shall be based on laboratory tests carried out on the same masonry concrete unit type under representative surcharge pressures for the project structure (and the same broad soil classification type, e.g. G, S, if applicable).
4. To determine maximum unreinforced wall height, determine height to which factors of safety for conventional SRWs are satisfied.
5. Minimum reinforcement length is $0.6H$ and must meet minimum requirements above.
6. Wall embedment to be determined as per Table 5-1 and must meet minimum requirements above.

- **Subsurface drainage materials within walls and around walls**—Whenever practical to avoid hydrostatic pressures, SRWs should be designed with sufficient drainage materials within and directly behind and below them, such as: gravel fill, drainage pipe, composite drainage mats and filter fabric, as discussed in Section 10.
- **Water bodies in front of walls**—SRWs along a body of water such as a lake shoreline, river or stream channel, or detention/retention ponds present several special considerations including:
    - rapid draw down pressures
    - scour
    - fines migration
    - foundation concerns
    - ice

These design considerations are covered in Section 10.5.

Section 5.8: Seismic Analysis

Properly designed reinforced SRWs subjected to seismic and/or dynamic loading will, in general perform well due to their flexible nature and enhanced ductility. When a SRW is requires seismic analysis, that evaluation should be done in an analysis separate from static methods, as outlined in Section 9 Seismic Design of Segmental Walls.

SRWs in seismically active zones may be subjected to both dynamic increment earth forces and inertial forces caused by the wall mass itself. The dynamic force is typically modeled as a pseudo-static load, in addition to the standard static loads. Because seismic events are short-term, some lower design requirements such as lower factors of safety are allowed for seismic analyses. Given such differences from static analyses, SRW seismic stability must be evaluated in an independent, separate analysis. However, most of resisting forces for the seismic analysis in Section 9 are the same as calculated in Sections 6 and 7.

It is important to note that a SRW seismic analysis must be performed in addition to, not in lieu, of the static analysis. Seismic analysis is not just a static analysis with higher loads; seismic analyses have lower minimum factors of safety, ignore live loads, and allow for higher geogrid design strengths compared to static analyses. Because of these differences, an engineer could satisfy seismic requirements in the seismic Section 9 while, incorrectly, not meeting the static requirements of Section 6 and 7. So both seismic and static analyses must be performed separately, with the final wall design layout providing sufficient factors of safeties for both the seismic and static cases, independently.

Section 5.9: Special Conditions

There are many conditions that may be present around a SRW that effect the stability of the SRW that are not specifically addressed in the standard wall design methods outlined in Sections 6 and 7. The owner or owner's representative and design professionals on a project involving a SRW should give these special conditions careful review to ensure they are considered and addressed by the appropriate design professional(s). A few of the more commonly encountered special considerations are reviewed here.

5.9.1: Tall Walls

Taller walls often have special concerns that are not significant issues for shorter walls. Given their height, taller walls will influence and be influenced by a much larger portion of a site, so project design professional(s) must pay careful attention to site conditions well beyond the location of the SRW wall face and well below the SRW system. Layout issues, such as the wall batter and geosynthetic reinforcement lengths become more significant with tall walls that lose more space and need more space for longer reinforcement lengths, as discussed in Section 4.

One of the primary structural concerns for taller walls is the post-construction settlement of the reinforced soil (infill). Even well-compacted, high-quality granular backfill will experience some post-construction settlement. Even if the

percentage of backfill settlement to fill height is less than one percent, this can yield significant settlement in a 30, 40 or 50 ft (9.14, 12.19 or 15.24 m) high wall. Total settlement of wall backfill is an issue for the performance of any top of wall structures such as pavements. Also, the possible differential settlement between the wall face, which is made of uncompressible concrete SRW units, and the wall backfill soils also is an issue for taller walls because the differential settlement increases with height. The backfill, and the geosynthetic layers within the fill, may be pulled down relative to the SRW units due to this differential settlement, possibly causing damage to the geosynthetic or overloading of the SRW unit-geosynthetic connection.

Design professionals' typical strategies to address these settlement issues for taller walls may include:

- Increasing the relative density compaction requirements to 95 percent Modified Proctor or 98 percent Standard Proctor.
- Encouraging higher levels of consistent compaction quality, including higher levels of quality control and quality assurance. More frequent compaction testing may be needed than for shorter walls. Installation practices that provide adequate performance in shorter walls, such as providing little compaction of the gravel fill or not strictly adhering to leveling and alignment tolerances, may need to be specifically addressed and improved to insure acceptable results for taller walls.
- Thickening the minimum width of the gravel fill behind the SRW unit face up to to 3 ft (1 m) to assist in graduating any differential settlement between the units and the reinforced backfill soils. Sometimes the thickness of the gravel fill is also graduated throughout the wall height. For example, for a 45 ft (13.7 m) wall the gravel fill may be 3 ft (1 m) thick gravel fill for the bottom 15 ft (4.5 m) of wall, 24 in. (610 mm) thick for the middle 15 ft (4.5 m) of wall, and one foot (305 mm) thick for the top 15 ft (4.5 m) of the wall.
- Decreasing the plasticity index of the fine fraction of the backill soils down to PI < 5 to 10.
- Requiring select granular backfill in the reinforced zone that has no more than 5 to 15% fines.
- Providing special attention to internal and surface drainage.
- Breaking a single tall wall into two tiered walls with the upper wall set back no more than a few feet. This does not significantly change the loads on the walls or the reinforcement requirements but it does allow the wall contractor an opportunity to reset the wall face alignment and reduces the differential settlement between the upper SRW units and the wall backfill.

Whether any or all of the suggestions are needed, as well what value in these criteria ranges should be used, depends on the height of the wall, the on-site soil and fill soil types available, the accuracy of the site and materials data, local experience, anticipated quality control of installation, and the wall design engineer's and project geotechnical engineer's judgment. As an example of the range of judgment, taller walls backfilled with on-site, fine-grained soils are commonly successful in some regions, while in other regions the native soils properties make fine-grained soils unsuitable as fill for even 10 ft (3.05 m) high walls.

5.9.2: Tiered Walls

Tiered walls often require more complex analysis than provided by standard wall stability design methods. Some simpler cases, however, may be conservatively modeled by the following method.

The effect of the upper tier walls is to act as a uniformly distributed load on the underlying tiers. Generally, if a tiered retaining wall is placed within a horizontal distance (wall face to wall face) less than twice the height of the underlying wall, a load will be applied to the lower wall. This 2V:1H rule assumes that there are no slopes below, between or above the tiered structures and that there are reasonably competent soils. Figure 5-6 may be used to estimate the equivalent uniformly distributed surcharge loading applied to a lower wall by the upper wall for both internal and external stability analyses of a tiered reinforced soil SRW system. If the upper tier is setback past the reinforced zone of the lower wall, however, it may behave more like a live load than a dead load because the vertical load of the upper wall is not contributing to stabilizing forces in the lower wall.

To determine approximate surcharge of upper wall 2 on lower wall 1, implement the following steps by iterative process:

1. Estimate base lenght L_1, and calculate external failure angle, $\alpha_{e(1)}$
2. Calculate q_{l1}, and q_{d1}, based upon L_1
3. Calculate actual L_1 based upon external stability analysis using q_{l1} and q_{d1} from step 2.
4. If calculated L_1(step 3) < estimated L_1(step 1), OK. If not, repeat steps 1-4.
5. Check global/overall stabilty of final geometric configuation.

J = Horizontal distance from wall face to wall face

L = Base length of geosynthetic reinforcement for soil reinforced SRWs and base width of conventional SRWs

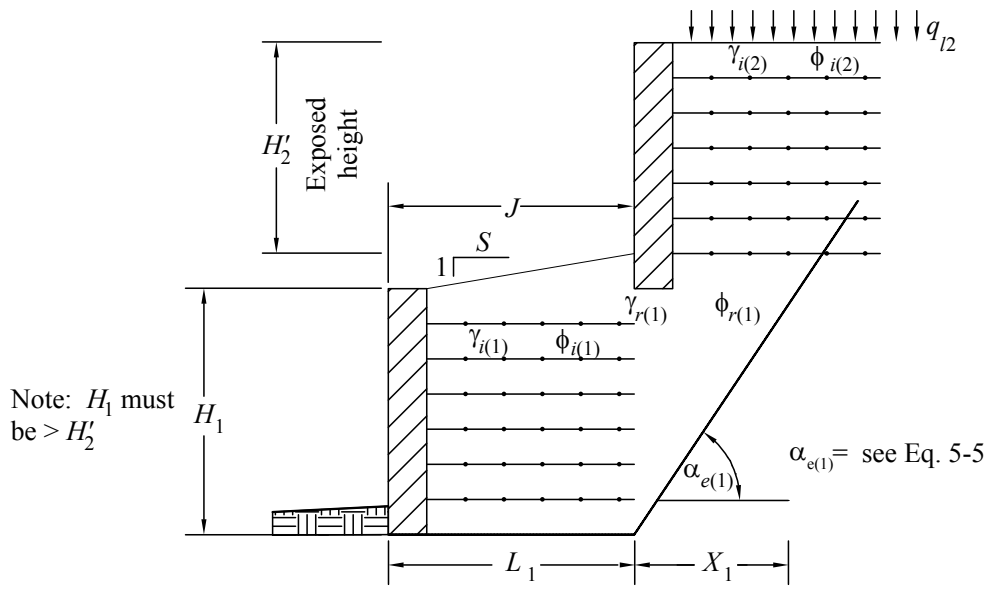

$X_1 = (H_1 + J/S)/\tan \alpha_{e(1)}$
S = 500 for flat (level) backfill between walls

For internal stability wall 1:

when $J \geq L_1$ — No influence: $q_{l1} = 0$ $q_{d1} = 0$

$0.3L_1 < J < L_1$ — Use percentage of surcharge:

$$q_{d1} = \frac{(L_1 - J)}{L_1}(\gamma_{i(2)} H_2') \qquad q_{l1} = \frac{(L_1 - J)}{L_1}(q_{l2})$$

$J \leq 0.3\ L_1$ — Use full surcharge:

$$q_{d1} = \gamma_{i(2)} H_2' \qquad q_{l1} = q_{l2}$$

For external stability wall 1:

when $J \geq (L_1 + X_1)$ — No influence: $q_{l1} = 0$ $q_{d1} = 0$

$(L_1 + 0.5X_1) < J < (L_1 + X_1)$ — Use percentage of surcharge:

$$q_{d1} = \frac{(L_1 + X_1 - J)}{X_1}(\gamma_{i(2)} H_2') \qquad q_{l1} = \frac{(L_1 + X_1 - J)}{X_1}(q_{l2})$$

$J \leq (L_1 + 0.5X_1)$ — Use full surcharge:

$$q_{d1} = \gamma_{i(2)} H_2' \qquad q_{l1} = q_{l2}$$

Note: $0.3L_1$ and $0.5X_1$ are arbitrary but empirically based geometric limits to ensure a conservative surcharge approximation

Figure 5-6: Surcharge Approximation for Tiered Walls

This method does not, however, account accurately for the effects of slope around or between tiered walls. The only way to accurately model tiers and adjacent slopes is to use conventional slope/global stability analysis methods. The retaining wall designer and the site geotechnical engineer must work together to ensure that all modes of failure are investigated for these complex structures. For further discussion of how to model SRWs for slope stability analysis, see Section 12.4 *Global Stability Around SRWs*.

The same approach as shown in Figure 5-6 is suggested for conventional gravity SRWs except that the dimension L_1 in the figure is restricted to the base width of the SRW units (W_u). In both instances, the lower wall height H_1', must be greater than the exposed height H_2' of the upper wall to use the approximation in Figure 5-6. The approximation is also applicable to triple and quadruple tiered wall systems by starting the analysis at the lowermost wall. The information that is required to analyze the effects of tiered SRWs is the geometric location of one tier with respect to the other (i.e., H_1, L_1, and J from Figure 5-6).

5.9.3: Sloping Toe Concerns

The grade at the toe of a SRW has a substantial effect on the stability of a SRW with respect to bearing capacity and global stability. When the grade at the toe of the wall slopes away from the wall face, the bearing capacity and global stability are reduced when compared to the same structure with a level grade at the toe of the wall. This reduction in stability is directly related to the reduction in the shear resistance along the failure surface and the reduction in the weight of soil stabilizing the structure. If the groundwater is elevated at the toe of the wall, global stability of the structure may be further compromised. The standard wall design methods outlined in Sections 6, 7 and 8 (conventional, reinforced, and ICS) do not account for destabilizing effects of a toe slope on a SRW. The project geotechnical engineer should evaluate the effects of a toe slope on bearing capacity and slope stability around a SRW as described in Section 12.

5.9.4: Foundation Stability

As with any structure, SRWs must be supported by foundation materials with sufficient capacity against the loads of the structure and that are adequate enough to avoid excessive settlement beneath the SRW. Sections 6 and 7 describe methods of estimating bearing pressures from SRWs and Section 12 describes geotechnical methods to estimate bearing capacity beneath a SRW.

5.9.5: Global Stability

The overall stability of the soils surrounding a SRW should be evaluated to ensure global stability of the planned SRW and surrounding grading and structures. Often the SRW is just a portion of overall site conditions such as slopes, other structures, and detention ponds, which all influence the overall slope stability of a planned project. Section 12 provides a general overview of how a global stability analysis that includes a SRW can be evaluated by a geotechnical engineer.

Section 5.10: Recommended Minimum Factors of Safety and Design Criteria

Selection of appropriate factors of safety should be based on the certainty with which design parameters and the consequences of failure are known and standard accepted engineering practice. Table 5-2 lists the recommended minimum safety factors for the internal and external stability failure modes for reinforced SRWs [Ref. 59]. Table 5-2 also provides additional applicable design criteria beyond these Factors of Safety for soil-reinforced SRWs.

5.10.1: Maximum Vertical Spacing of Geogrid

It is often cost efficient, from a reinforcement materials perspective, to maximize vertical spacing between geogrid layers. However, even when all Factors of Safety are satisfied for internal stability, facial stability and internal compound stability, limiting maximum vertical spacing between layers to 24 in. (610 mm) is suggested to minimize construction stability issues. Some proprietary systems are capable of supporting larger spacing between

reinforcement layers, however, the reinforcement spacing should not exceed 32 in. (813 mm). The wall designer should choose an appropriate maximum reinforcement spacing for the proprietary system used in the design. For modular blocks that are less than or equal to 10 in. (254 mm) in depth, it is recommended that the maximum vertical spacing of the reinforcement layers be no more than twice the depth of the unit. Reguardless of the spacing of the reinforcement, compaction of the reinforced backfill/retained soil must never exceed 8 in. (203 mm) in thickness.

5.10.2: Minimum Geogrid Length

In this manual, a minimum length of reinforcement to height of wall ratio (L/H) of 0.6 has been established. For most cases, depending on soil shear strength characteristics, this value is sufficient to meet internal and external requirements. When a backslope and/or toe slope is present, or an extra-ordinary loading condition exists, frequently the L/H ratio of 0.6 does not satisfy minimum factors of safety. It is not uncommon for L/H ratio to exceed 1.0 for a wall with a 2H:1V backslope. Internal Compound Stability analysis in this manual will go a long way to prevent inadequate reinforcement lengths, however, this does not replace the need to carry out a full global stability analysis. In addition, it is recommended that the absolute minimum value for L be 4 ft (1.2 m).

5.10.3: Maximum Wall Height

The design and construction of retaining walls in excess of 50 ft (15.24 m) have become more common. Terraced and single-height retaining walls in excess of this height have also been constructed.

While there is no theoretical maximum height for a properly designed geosynthetic-reinforced SRW there are some practical concerns with taller walls as discussed in Sections 4.4 and 5.9.1 that should be addressed.

5.10.4: Factors of Safety and Design Criteria Summary

Table 5-2: Recommended Minimum Factors of Safety and Design Criteria for Conventional/ Reinforced SRWs (1, 2, 3, and 4)

Failure Modes		Static	Seismic
Wall Design			
Base Sliding	FS_{sl}	1.5	1.1
Overturning	FS_{ot}	1.5/2.0	1.1
Internal Sliding	$FS_{sc}/FS_{sl(i)}$	1.5	1.1
Tensile Overstress	FS_{to}	1.5	1.1
Pullout	FS_{po}	1.5	1.1
Connection	FS_{cs}	1.5	1.1
Internal Compound Stability	F_{com}	1.3	1.1
Geotechnical Concerns			
Bearing Capacity	FS_{bc}	2.0	1.5
Global Stability	FS_{gl}	1.3-1.5	1.1
Other Wall Design Criteria			
Minimum Reinforced Zone Width	L	$0.6H$ (5)	
Minimum Wall Embedment	H_{emb}	0.5 ft (152 mm) (6)	
Minimum Anchorage Length	L_a	1.0 ft (305 mm)	
Maximum Wall Batter	w	20 degrees	

NOTES:
1. The minimum factors of safety given in this table assume that stability calculations are based on measured site-specific soil/wall data. Measured data are defined as the results of tests carried out on actual samples of soils and geosynthetic products at the proposed structure and actual samples of masonry concrete units (i.e., the same molds, forms, mix design and infill material or same broad soil classification type (e.g. G, S, if applicable).
2. When estimated data is used, the designer may need to use larger factors of safety than those shown in this table or conservative estimates of parameter values. Estimated data includes bulk unit weight and shear strength properties taken from the results of ASTM methods of testing (or similar protocols) carried out on samples of soil having the same USCS classification as the project soil and the same geosynthetic product.
3. Estimated data for facing shear capacity and connection capacity analyses shall be based on laboratory tests carried out on the same masonry concrete unit type under representative surcharge pressures for the project structure (and the same broad soil classification type, e.g. G, S, if applicable).
4. To determine maximum unreinforced wall height, determine height to which factors of safety for conventional SRWs are satisfied.
5. Minimum reinforcement length is $0.6H$ and must meet minimum requirements above.
6. Wall embedment to be determined as per Table 5-1 and must meet minimum requirements above.

SECTION 6
CONVENTIONAL SEGMENTAL RETAINING WALL DESIGN

Conventional segmental retaining walls (SRWs) are gravity structures that rely solely on their weight to resist destabilizing forces. There are two categories of conventional SRWs; single depth SRWs and multiple depth SRWs. Single depth SRWs are full gravity structures in which the height, width, weight, batter, and shear capacity of the SRW units determines the maximum unreinforced (no geosynthetic) SRW height for a given retained soil and surcharge loading condition. Multiple depth SRWs are formed by interlocking units to create cribs or bins that are filled with free draining gravel adding mass to the structure. Multiple depth SRWs are not addressed specifically in this methodology.

To safely determine the maximum height for unreinforced gravity SRWs the analysis and design steps summarized below are recommended:

- Determine SRW unit properties, wall geometry, and soil/groundwater parameters at the site.
- Calculate the driving forces on the structure.
- Calculate factors of safety for external (Figure 5-3A) and internal (Figure 5-3B) failure modes based on a trial design.
- Adjust wall height to meet minimum factors of safety criteria.
- Check global stability of the SRW system (Figure 5-3C).

Section 6.1: Design Assumptions

Conventional SRWs are analyzed using standard geotechnical and structural engineering methods for concrete gravity retaining wall structures [Ref. 36] with some refinements that reflect the unique dry-stacked unit construction.

The design and analysis of conventional gravity SRW's requires several assumptions and standards for consistent evaluation and uniform application of the generic industry methods for gravity retaining walls and the general SRW methods presented in Section 5. Additionally, several design assumptions associated with the analysis have been made to simplify calculations.

6.1.1: Coulomb Earth Pressure Theory

Calculation of earth pressure is based on Coulomb's general equation for the active earth pressure coefficient K_a as presented in Section 5, which overviews reasons for the use of this theory and provides a more thorough overview of the methods and assumptions involved in the determination of active earth pressures and forces for SRW stability design. Derived from these general design principles presented in Section 5, the specific equations and interpretations for each reinforced wall design case are detailed in Section 6.4, Equations 6-1 to 6-5.

6.1.2: Loading Assumptions

This Section's methodology makes several assumptions regarding loading and drainage that are more thoroughly discussed in Section 5.5 through 5.8. A brief summary of these assumptions are:

Surcharges are assumed to be simplified uniform loads starting directly behind the top wall face, with stabilizing effects of only dead loads, not live loads, considered. The conventional analysis in this section does not address offset loads or any gradual reduction in their influence with increasing setback. If a surcharge behind a conventional wall is offset, the wall design engineer must determine if this offset surcharge is influencing the SRW, or not, prior to beginning this methodology.

No hydrostatic pressure is assumed to be exerted on the wall because it is assumed adequate drainage has been provided in and around the wall to evacuate any water before pressure can build up on the wall. Details on handling surface water and groundwater to ensure water conditions on site meet this assumption are presented in Sections 10, 11 and 12.

In this section, calculations address only static loads and assume no dynamic loading from a seismic event. In a seismically active zone, designing for dynamic loads is done by modeling the additional seismic loads as pseudo-static loads, as covered in detail in Section 9 *Seismic Design of Segmental Retaining Walls*.

6.1.3: Single- and Multiple-Width SRWs

This section addresses single-width SRWs only. Similar calculations can be performed on multiple-depth SRWs, but specific methodologies for the internal stability checks needed for the numerous types of multiple-depth SRWs is not addressed in this manual. To act as a gravity mass, multiple depth structures must be physically interlocked together and not simply stacked with one column of block behind the other. Multiple depth SRWs are often considered semi-gravity structures because their base is sometimes wider than the remainder of the structure, with the weight of the fill above the base contributing to the stability of the wall.

Section 6.2: Minimum Factors of Safety for Stability Analyses

Selection of appropriate factors of safety should be based on the certainty with which design parameters and the consequences of failure are known. Table 5-2 in Section 5.10.4 lists the recommended minimum safety factors for the external stability, internal stability, and geotechnical failure modes for conventional SRWs (base sliding; overturning; internal sliding; bearing capacity; and global stability).

Section 6.3: Segmental Unit Properties

Dimensions and mechanical properties of segmental units must be established prior to design. These parameters are:

H_u = SRW unit height (ft (m))
H_{cu} = SRW unit cap (coping) height (ft (m))
W_u = SRW unit width (ft (m))
γ_u = weight of segmental unit per unit volume as placed (includes gravel fill) (pcf (kN/m^3))
G_u = distance to center of gravity of horizontal SRW unit, including gravel fill, measured from the front face of the unit (ft (m))
ω = wall batter due to segmental unit setback per course (deg)
μ_b = interface friction coefficient for base segmental unit sliding on bearing soils
a_u = apparent minimum shear capacity between segmental units (lb/ft (kN/m))
λ_u = apparent angle of friction between segmental units (deg)
Δ_U = setback per course H_u (in. (mm))

Section 6.4: External Stability

External stability modes of failure for overturning and base sliding are illustrated in Figure 6-1. All external stability calculations shall be performed on a wall section of unit length (1 ft (1 m)). All forces in stability analyses are expressed as force per unit length of wall (lb/ft (kN/m)) and moments as force-length per unit length of wall (lb-ft/ft (kN-m/m).

6.4.1: Earth Pressures and Forces

The distribution of the earth pressures due to retained soil self-weight and surcharge loadings, which are assumed to act directly on the back of single depth conventional SRWs, is shown in Figure 6-2. Because the interface friction

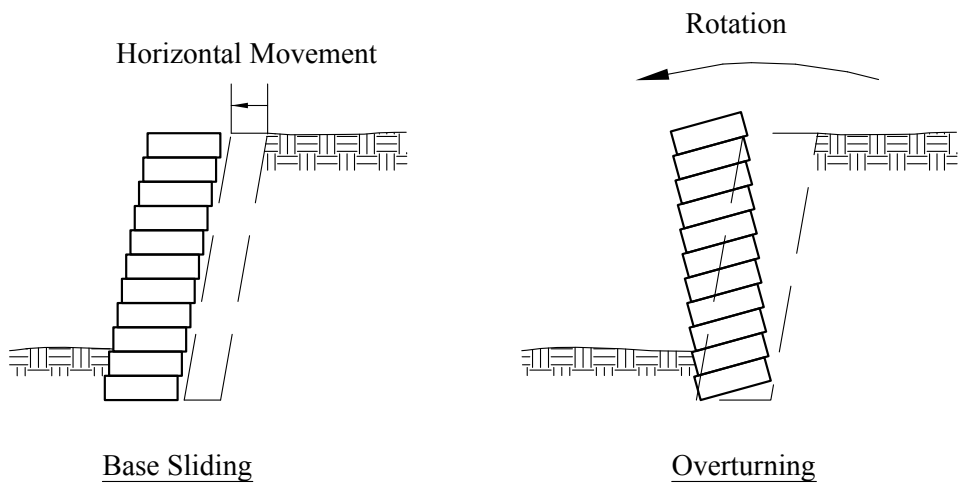

Figure 6-1: Main Modes of Failure for External Stability

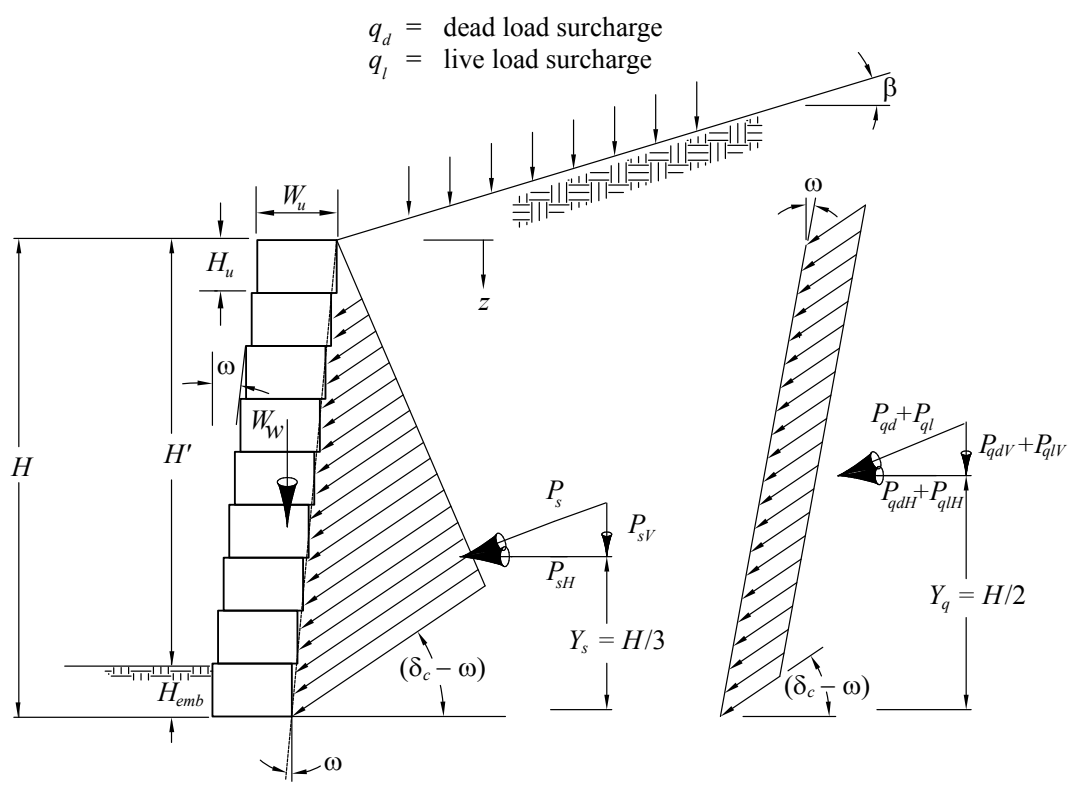

$$P_s = \frac{\gamma_r K_{acon} H^2}{2}$$

$$P_{qd} = (q_d) K_{acon} H$$

$$P_{ql} = (q_l) K_{acon} H$$

$$P_a = P_s + P_{qd} + P_{ql}$$

K_{acon} = using Coulomb Equation 6-1 infill soil properties

Figure 6-2: Forces and Geometry for External Stability Analysis of Conventional SRWs

angle between the back of the SRW units and the retained soils is assumed to not be zero, the earth pressures and forces do not act perpendicular to the back of the dry-stacked column of wall units. As stated in the design overview, Section 5.4.3, because a downward inclined lateral pressure distribution should result from the soil resistance along the back of the units, the wall batter (ω) should be greater than δ_c, the mobilized interface friction angle at the back of the units of a conventional SRW ($\delta_c > \omega$). This is generally satisfied for most quality soils by the overall requirement that $\omega < 20°$. Also as stated in design overview Section 5.4.4, because the earth pressures act at an angle, the effect on the wall due to the earth forces are broken into horizontal and vertical components. The horizontal components of earth forces, which load the wall, and the vertical components, which stabilize the wall, are both considered in this manual. As a conservative simplification for analysis, however, vertical components can be ignored.

The Coulomb active earth pressure coefficient K_{acon} for a conventional SRW is calculated using the version of Equation 5-3 shown below:

$$K_{acon} = \frac{\cos^2(\phi_{rc} + \omega)}{\cos^2 \omega \cos(\omega - \delta_c)\left[1 + \sqrt{\frac{\sin(\phi_{rc} + \delta_c)\sin(\phi_{rc} - \beta_{con})}{\cos(\omega - \delta_c)\cos(\omega + \beta_{con})}}\right]^2} \qquad \text{[Eq. 6-1]}$$

where:

$$\delta_c = 2/3\ \phi_{rc} \qquad \text{[Eq. 6-2]}$$

The selection of the peak friction angle for retained soil behind a conventional SRW (ϕ_{rc}) is based on the properties of the weakest dominant soil material located in the distance of up to $H/2$ behind a conventional SRW structure. The term β_{con} is the equivalent backslope angle (from the horizontal) for a conventional SRW and is further defined in Section 6.4.1.1, Equations 6-4 and 6-5A/B. The term δ_c is the mobilized interface friction angle in degrees at the back of the conventional SRW units.

In the scenario when a wall is vertical with no backslope (i.e., $\beta = 0$ and $\omega = 0$) and the designer wishes to conservatively ignore interface friction (i.e., $\delta_c = 0$) the coefficient of active earth pressure simplifies to Equation 5-4.

$$K_{acon} = \frac{1 - \sin\phi_{rc}}{1 + \sin\phi_{rc}} \qquad \text{[Eq. 6-3]}$$

6.4.1.1: Top of Wall Geometry for Equivalent Slopes

The equivalent slope β_{con} for earth pressure calculations is the average slope within the influence zone behind a SRW and varies with top of wall geometry. The estimated horizontal distance after which a crest in a slope will no longer significantly reduce the soil pressure on a conventional SRW is defined as $2H$ back from the top of wall (at back of top unit). This is the distance to which an equivalent slope is drawn. The maximum height of slope influence for internal analysis $h_{\max con}$ and the slope used for internal analysis β_{con} are calculated as follows as illustrated in Figures 6-3 and 6-4:

$$h_{\max con} = 2H \tan\beta \qquad \text{[Eq. 6-4]}$$

For Slope Case A: $h_s \le h_{\max con}$ (broken slope crests within $2H$)

$$\beta_{con} = \arctan\frac{h_s}{2H} \qquad \text{[Eq. 6-5A]}$$

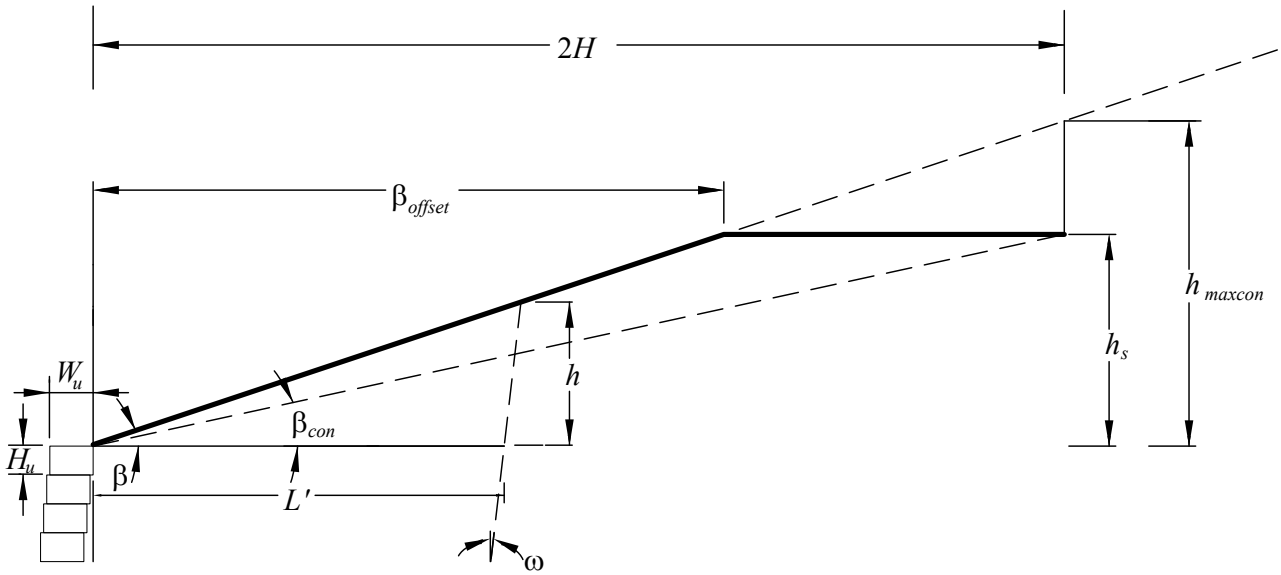

Figure 6-3: Broken Back Geometry—CASE A

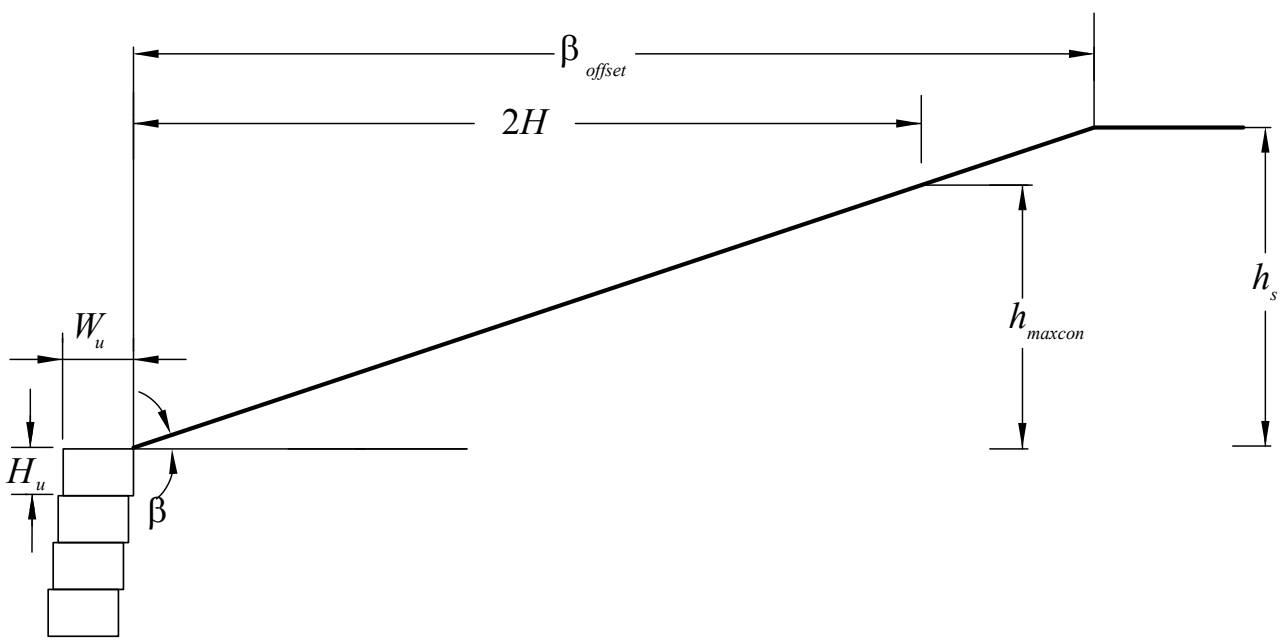

Figure 6-4: Broken Back Geometry—CASE B

For Slope Case B: $h_s > h_{\max con}$ (an infinite slope or broken slope that crests beyond $2H$)

$$\beta_{con} = \beta \qquad \text{[Eq. 6-5B]}$$

6.4.1.2: External Earth Forces and Locations

The active earth force due to soil self-weight P_s is calculated by integrating the earth pressure expression described by Equation 5-1 over the wall height H to give:

$$P_s = 0.5\, K_{acon}\, \gamma_r\, H^2 \qquad \text{[Eq. 6-6]}$$

and P_q is due to the uniformly distributed surcharges extending over the backfill surface and is calculated as:

$$P_{qd} = q_d\, K_{acon}\, H \qquad \text{[Eq. 6-7]}$$

$$P_{ql} = q_l\, K_{acon}\, H \qquad \text{[Eq. 6-8]}$$

Horizontal components

The horizontal active earth force due to soil self-weight P_s is calculated as follows:

$$P_{sH} = 0.5\, K_{acon}\, \gamma_r\, H^2 \cos(\delta_c - \omega) \qquad \text{[Eq. 6-9]}$$

The horizontal active earth force due to surcharges P_{qH} is calculated as follows:

$$P_{qH} = (q_l + q_d)\, K_{acon}\, H \cos(\delta_c - \omega) \qquad \text{[Eq. 6-10]}$$

$$P_{qdH} = q_d\, K_{acon}\, H \cos(\delta_c - \omega) \qquad \text{[Eq. 6-11]}$$

$$P_{qlH} = q_l\, K_{acon}\, H \cos(\delta_c - \omega) \qquad \text{[Eq. 6-12]}$$

The total horizontal active earth force P_{aH} acting at the back of the wall units is calculated as follows:

$$P_{aH} = P_{sH} + P_{qdH} + P_{qlH} \qquad \text{[Eq. 6-13]}$$

Vertical Components

As discussed in Section 5.4.3, the vertical components of earth force due to retained soil P_{sV} are considered in the analysis as well as the vertical component of earth force due to surcharge P_{qV}

The vertical active earth force due to soil self-weight P_{sV} is calculated as follows:

$$P_{sV} = 0.5\, K_{acon}\, \gamma_r\, H^2 \sin(\delta_c - \omega) \qquad \text{[Eq. 6-14]}$$

The vertical active earth forces due to dead and live load surcharges P_{qdV} and P_{qlV} are calculated as follows:

$$P_{qdV} = q_d\, K_{acon}\, H \sin(\delta_c - \omega) \qquad \text{[Eq. 6-15]}$$

$$P_{qlV} = q_l\, K_{acon}\, H \sin(\delta_c - \omega) \qquad \text{[Eq. 6-16]}$$

The total vertical active earth force P_{aV} acting at the back of the wall units is calculated as follows:

$$P_{aV} = P_{sV} + P_{qdV} + P_{qlV} \qquad \text{[Eq. 6-17]}$$

Passive resistance developed in front of the wall is conservatively ignored for the reasons given in Sections 4.2 and 5.4.4.

6.4.2: Weight of Segmental Retaining Wall

The weight (W_W) of the column of SRW units on the leveling pad is based on the weight per unit volume of SRW units γ_u. The SRW wall weight W_W per lineal foot acting at the base is calculated as:

$$W_W = H\,\gamma_u\,W_u \qquad \text{[Eq. 6-18]}$$

6.4.3: Base Sliding

The external forces acting to destabilize the conventional single depth SRW are shown in Figure 6-2.

The base sliding resistance is calculated as follows:

$$R_{sc} = \mu_b\,(W_W + P_{sV} + P_{qdV})\tan\phi \qquad \text{[Eq 6-19]}$$

The soil strength parameter ϕ should be selected according to the soil type upon which the bottom SRW unit is founded. Normally, this will be an aggregate leveling pad ϕ_{lp}. For some projects, the base unit may rest on the foundation soils. In either case, the available sliding resistance must be reduced by a masonry friction reduction factor μ_b applied to the underlying soil friction coefficient tan ϕ. This factor accounts for reduced shear resistance due to the relatively smooth masonry unit sliding across soil determined from large scale testing. Actual test data specific to soil type and SRW unit should be used in design. In the absence of specific test data a reasonable value for μ_b may be selected using Table 6-1.

Table 6-1: Masonry Friction Reduction Factor, μ_b [Ref. 25]

Soil Type (USCS)	Soil ϕ (Deg)	Masonry Friction Reduction Factor μ_b
GW, GP	34 - 40	0.7
GM, SW, SP	30 - 36	0.65
GC, SM, SC	28 - 34	0.6
ML, CL	25 - 32	0.55

Given that the leveling pad at the base of the wall units should be granular material, the masonry friction reduction factor generally used for conventional wall analysis will be 0.65 to 0.7.

The factor of safety against sliding parallel to the base of the SRW unit can be calculated as follows:

$$FS_{sl} = R_{sc} / P_{aH} \qquad \text{[Eq. 6-20]}$$

The maximum unreinforced height of wall H is typically adjusted to achieve the targeted minimum factor of safety for design (typically $FS_{sl} \geq 1.5$, see Table 5-2).

6.4.4: Overturning

The resistance of conventional single depth SRWs to overturning about the toe is evaluated by resisting moments taken with respect to the toe of the wall (point O in Figure 6-5):

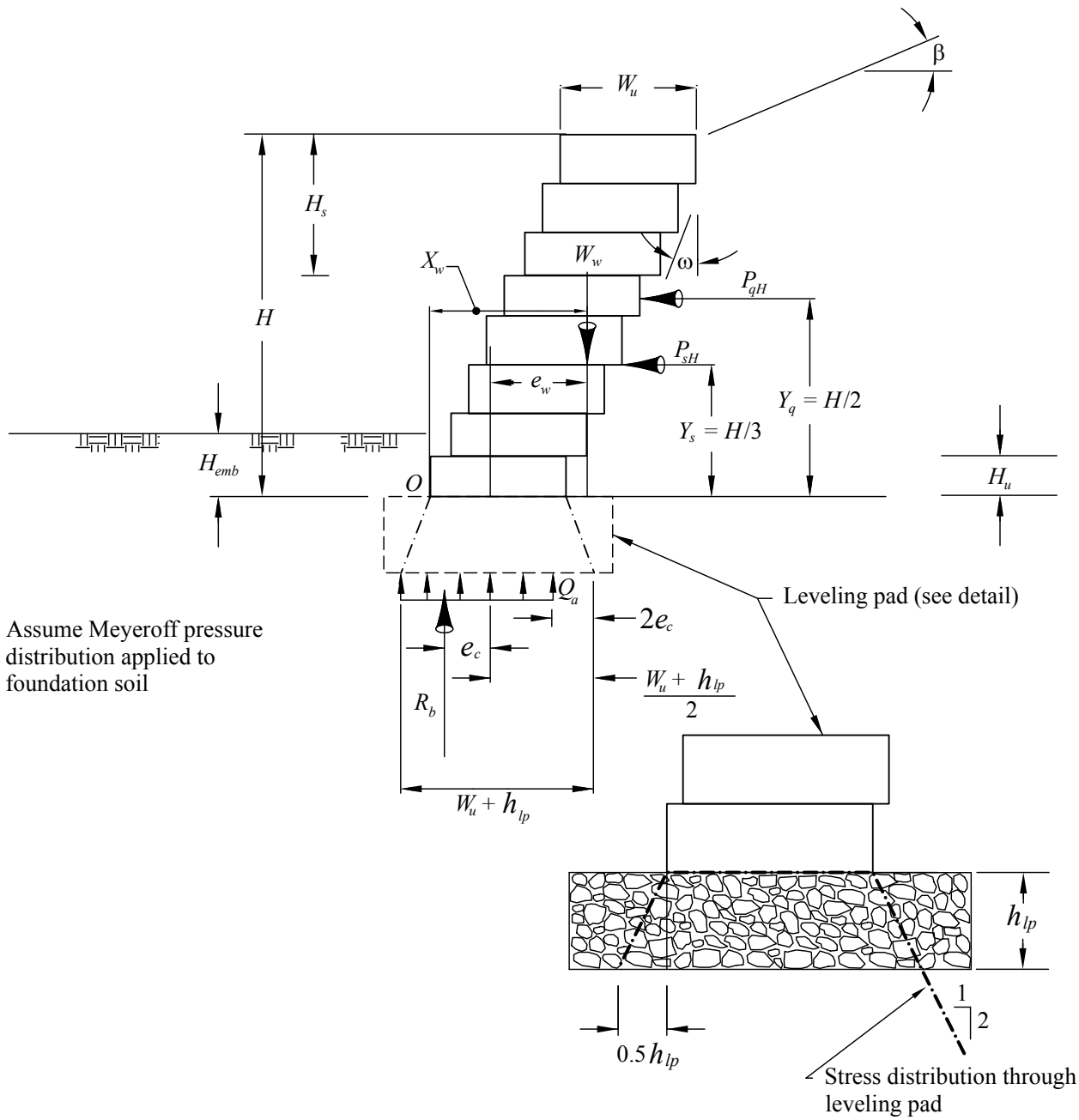

Figure 6-5: Free Body Diagram of Forces for Conventional Single-Depth SRW

The resisting moment M_r can be calculated as follows:

$$M_r = W_w X_w + P_{sV} (W_u + Y_s \tan \omega) + P_{qdV} (W_u + Y_q \tan \omega) \qquad \text{[Eq. 6-21]}$$

where X_w is the resisting moment arm of the wall units and the remaining terms are resisting moments of the vertical components. The vertical components, acting at the back of the units, are calculated at a distance of the width of the units, W_u, plus the extra distance created by the cant of the wall over the height to reach the center of these forces. The term X_w is calculated as the distance from the toe of the wall to the center of gravity of the dry-stacked column of SRW units, including the batter of the wall units, that occur at half the wall height.

$$X_w = G_u + 0.5\, H \tan(\omega) - 0.5\, \Delta_U \qquad \text{[Eq. 6-22]}$$

The driving moment (M_o) due to the horizontal component of earth forces acting at the back of the SRW face is calculated as follows:

$$M_o = P_{sH}\, Y_s + P_{qH}\, Y_q \qquad \text{[Eq. 6-23]}$$

where

$$Y_s = H/3 \qquad \text{[Eq. 6-24]}$$

$$Y_q = H/2 \qquad \text{[Eq. 6-25]}$$

The resistance of conventional single depth SRWs to overturning about the toe is evaluated by calculating a factor of safety FS_{ot} that is the ratio of the sum of the resisting moments to the sum of the driving moments taken with respect to the toe of the wall (point O in Figure 6-4), hence:

$$FS_{ot} = M_r / M_o \qquad \text{[Eq. 6-26]}$$

If the calculated value of FS_{ot} is less than the allowable design value (typically 1.5, see Table 5-2) then the maximum unreinforced height of the wall should be adjusted lower.

6.4.5: Bearing Pressure

The potential for tilting of a conventional single depth SRW structure or a bearing capacity failure of the foundation soils due to overstressing must be evaluated. For a detailed discussion of bearing capacity analysis refer to Section 12.

For many projects, the site geotechnical engineer may have established an allowable bearing pressure for the foundation soils that includes a settlement and bearing capacity criteria. The calculated bearing pressure for a conventional wall (Q_{ac}) should be less than the allowable bearing pressure established by the geotechnical engineer. If the calculated bearing pressure (Q_{ac}) is greater than the allowable pressure provided by the geotechnical engineer or the FS_{bc} calculated in Section 12 is less than the minimum design value (typically $FS_{bc} \geq 2.0$, see Table 5-2), consultation with the geotechnical engineer is suggested. The bearing pressure exerted by a SRW on the foundation soil beneath the leveling pad of a SRW is simply the weight of wall units and load of the vertical components, determined over the effective width of the base of the level pad, including the effects of eccentricity, as follows:

$$Q_{ac} = \frac{[W_W + P_{sV} + P_{qV}]}{B_c} \qquad \text{[Eq. 6-27]}$$

where:

$$B_c = W_u + h_{lp} - 2e_c \qquad \text{[Eq. 6-28]}$$

The effective width of SRW for bearing calculations is considered at the base of the leveling pad, which should be 0.5 ft (152 mm) thick, minimum. As such, the width of bearing per Meyerhof distribution as shown on Figure 6-5 is 0.5 ft (152 mm) wider than the width of the units.

and where:

$$e = \frac{M_o - W_W (e_w)}{W_W} \qquad \text{[Eq. 6-29]}$$

$$e_w = X_w - 0.5 W_w \qquad \text{[Eq. 6-30]}$$

Further discussion of bearing capacity and bearing factor of safety is provided in Section 12.

Section 6.5: Internal Stability

To resist lateral earth pressures, a dry-stacked column of SRW units must act as a coherent mass. The SRW units must have sufficient interface shear capacity to transfer all applied external forces to the base of the structure.

The analysis for internal shear capacity (Figure 6-6) is similar to external base sliding stability calculations described in Section 6.4.3, Equation 6-19 and illustrated in Figure 6-1. Internal sliding resistance, however, is developed by shear at the unit-to-unit interface. The height of the column of dry-stacked SRW units above the sliding surface is described by the intermediate height parameter H_s as illustrated in Figure 6-5.

Internal sliding analysis at SRW unit interface layers should proceed from the bottom of the wall to the top because lower elevation interfaces are typically more critical.

The portion of internal sliding resistance due to interface shear capacity (V_u) can be calculated from:

$$V_u = a_u + W_W \tan \lambda_u \qquad \text{[Eq. 6-31]}$$

where:

a_u = apparent shear capacity adhesion (lb/ft (kN/m))
λ_u = apparent peak interface friction angle between SRW units (deg)
W_W = total weight of column of dry-stacked SRW units between sliding surface and top of wall (lb/ft (kN/m)).

The interface shear capacity (V_u) has units of force/length to be consistent with the convention adopted for all stability calculations in this manual.

The vertical weight of the column of dry-stacked units above each sliding surface for each unit interface, at a varying H_s, is calculated as follows:

$$W_W = H_s \gamma_u W_u \qquad \text{[Eq. 6-32]}$$

The interface shear strength parameters a_u and λ_u must be established from appropriate full-scale testing as discussed in Section 2.1.3.2.

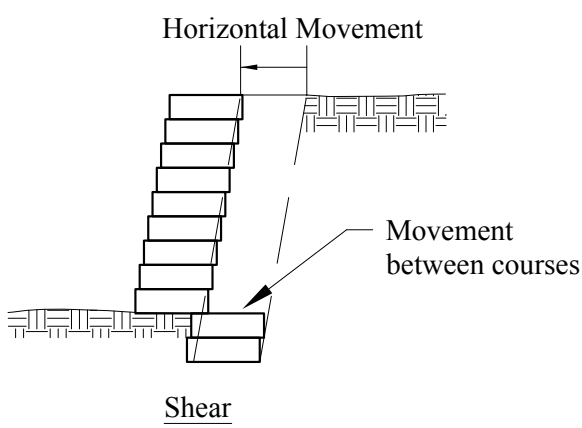

Figure 6-6: Sliding—Main Mode of Failure for Internal Stability

The vertical components at each unit interface for the internal sliding resistance, P_{sV} and P_{qdV}, are calculated in the same manner as Equations 6-14 and 6-15, substituting a varying H_s for H.

The horizontal component of the total internal sliding active earth force (P_{aH}) located above the various intermediate heights internal sliding surfaces located at intermediate heights (H_s) is calculated by substituting H_s for H in Equations 6-9, 6-11 and 6-12.

The factor of safety for shear capacity (FS_{sc}) is the ratio of resisting forces to driving forces at each intermediate unit height:

$$FS_{sc} = V_u / P_{aH} \qquad \text{[Eq. 6-32]}$$

The magnitude of FS_{sc} should satisfy minimum recommended design values for internal sliding stability (typically 1.5, see Table 5-2). For a given set of soils, backslope angle (β), and surcharge condition, the magnitude of FS_{sc} can be adjusted by lowering the wall height H, increasing wall facing batter (ω), or selecting an alternative SRW unit.

Section 6.6: Example Calculations

An example analysis and design problem for a generic conventional single depth SRW is presented in Appendix A. The example serves to illustrate many of the analytical concepts presented in this design manual and to highlight important calculation steps.

SECTION 7
REINFORCED SOIL SEGMENTAL RETAINING WALL DESIGN

Reinforced soil segmental retaining walls (SRW's) are gravity retaining walls with an expanded width created by a geosynthetic reinforced (infill) soil mass located behind a column of dry-stacked (SRW) units (Figure 2-2). The dry-stacked column of SRW units and the geosynthetic reinforced (infill) soil zone act together to resist the destabilizing forces generated by the retained soil (backfill) and surcharge loadings.

Geosynthetic reinforcement is used to create a significantly larger gravity mass than is possible with an isolated, dry-stacked column of SRW units. Geosynthetic reinforced soil SRWs can be used to construct higher retaining wall structures and support greater surcharge loads than possible with conventional SRW structures.

In this manual, the design of SRWs is based on limit equilibrium methods of analysis together with factors of safety applied to the strength of the component materials. An overview of the components of a reinforced wall and guidelines for the selection of wall material properties and interpretation of test data are presented in Section 2. An overview of the basic design concepts and assumptions for both conventional and reinforced SRWs is presented in Section 5, while this section presents the specific application concepts of Section 5 for reinforced walls.

The design methodology in this manual to be used by the wall design engineer is focused on stability analyses related to four general classifications of failure: external stability, internal stability, local facing stability, and internal compound stability. Each is explained in detail in subsequent sections of this chapter, while internal compound stability analysis is described in Section 8. When appropriate, seismic loading must be accounted for in each of these failure modes, as described in Section 9. Drainage in and around the wall must also be addressed as explained in Section 10. While generally the geotechnical engineer's responsibility, possible global/slope stability failures around and beneath the SRW and an evaluation of bearing capacity and potential settlement of foundation soils must also be addressed.

A flow chart of the design methodology recommended in this NCMA manual for soil reinforced SRW structures that addresses all potential failure modes is shown in Figure 5-2. The components and typical geometry of a reinforced SRW structure are illustrated in Figure 2-2.

Section 7.1: Design Assumptions

The design and analysis of reinforced soil SRW's requires several assumptions and standards for consistent evaluation and uniform application of the generic methods presented. Additionally, several design assumptions associated with the analysis have been made to simplify calculations. The design assumptions made in this manual are outlined below.

7.1.1: Coulomb Earth Pressure Theory

Calculation of earth pressure is based on Coulomb's general equation for the active earth pressure coefficient (K_a) as presented in Section 5.4, with specific interpretations of this equation provided in this chapter for external, internal and local facing stability analyses. The reader is referred to Section 5 of this manual for an overview of the reasons for the use of this theory and for a more thorough overview of the methods and assumptions involved in the determination of active earth pressures, forces, and failure planes in reinforced SRW stability design. Derived from these general design principles presented in Section 5.4, the specific equations and interpretations for each reinforced wall design case are detailed in Sections 7.4, 7.5, and 7.6.

7.1.2: Reinforced Zone Width

In this design manual, the base of the reinforced (infill) soil zone (*L*) for external stability calculations includes the width of the dry-stacked column of SRW units. The lateral extent of the reinforced soil mass shall be taken as a line drawn parallel to the face of the stacked SRW units at a distance *L* (base width of reinforced zone) from the face of the structure (Figure 7-2).

Additionally, the reinforcement length may change from top to bottom of a reinforced soil wall provided that each layer has a minimum length greater than *L* determined from external stability requirements. Selected layers of reinforcement may be lengthened at the top of a reinforced SRW to satisfy internal anchorage requirements. Also, some layers might also be lengthened at the bottom of a reinforced SRW to address issues outside the basic wall structural design presented in this section, such as foundation or slope stability concerns. However, any additional length of reinforcement greater than *L* (the minimum width of the reinforced soil zone) is not considered to modify the dimensions of the base width of the reinforced zone described above. So for external stability calculations, the reinforced zone is always limited to the mass of soil located between parallel front face and back boundaries a distance *L* (base width) apart, regardless of the number of reinforcement layers that may have to be locally extended at the top or bottom of a wall for other requirements.

In some applications, shorter, supplementary layers reinforcement elements may be used at the face of the retaining wall to improve facial stability or construction stability (Figure 7-2). Such shorter, supplementary layers are in addition to the primary reinforcement lengths used to satisfy external stability. Such supplementary layers should not be considered to shorten the base width of the reinforced zone, length *L*. This would include supplementary layers between primary layers (Figure 7-2) or added at top wall units, above upper-most primary layer. Typically, the supplementary reinforcement is 4 to 5 ft (1.2 to 1.5 m) long and is located at the facing. Although this methodology does not explicitly analyze the effects of the additional supplementary reinforcement, experience has demonstrated that additional stability at the face can be achieved with these shorter reinforcement layers.

There may also be some situations where a layer (or layers) of reinforcement in discreet, limited locations are truncated to less than the base width of the reinforced zone *L* to accommodate an object within the reinforced zone, such as a catch basin or a post foundation. The SRW engineer must carefully evaluate the stability effects of such intrusions in the reinforcement zone and determine if they compromise external or internal stability and if a remedy is needed. However, an occasional truncated geogrid layer within the reinforced zoned should not always and automatically be considered to shorten the base width of the reinforced zone *L* used in the external stability calculations.

7.1.3: Loading Assumptions

This section's methodology makes several assumptions regarding loading and drainage that are more thoroughly discussed in Section 5.6 through 5.8. A brief summary of these assumptions are:

- Surcharges are assumed to be simplified uniform loads starting directly behind the top wall face with stabilizing effects of only dead loads, not live loads, considered. Offsets (setbacks) of surcharges are generally ignored except in two cases: determining the reductions in the dead load resisting forces due to an offset and for determining surcharge loading for facial stability analysis.
- No hydrostatic pressure is assumed to be exerted on the wall because it is assumed adequate drainage has been provided in and around the wall to evacuate any water before pressure can build up on the wall. Details on handling surface water and groundwater to ensure water conditions on site meet this assumption are presented in Sections 10, 11, and 12.
- In this section, calculations address only static loads and assume no dynamic loading from a seismic event. In a seismically active zone, designing for dynamic loads is done by modeling the additional seismic loads as pseudo-static loads, as covered in detail in Section 9 *Seismic Design of Segmental Retaining Walls*.

Section 7.2: Recommended Factors of Safety and Design Criteria

Selection of appropriate factors of safety (*FS*) should be based on the certainty with which design parameters and the consequences of failure are known and standard accepted engineering practice. Table 5-2 lists the recommended minimum safety factors for the external, internal and facial stability failure modes analyzed in this chapter (Ref. 59). Generally, the basic static stability factors of safety for the reinforced SRWs wall design presented in this section should be a minimum $FS = 1.5$, except for overturning, which should not be less than $FS = 2.0$. This $FS = 1.5$ minimum does not apply to recommend minimum factors of safety for other analyses beyond this section, such as Internal Compound Stabilty (Section 8), Seismic (Section 9) and Global Stability (Section 12). For these analyses of reinforced walls, lower minimum factors of safety are recommended. Beyond standard stability factors of safety for retaining walls, reinforced walls should also meet minimum geogrid layout criteria. These criteria should govern when their requirements for geogrid layout exceed that needed to satisfy the stability calculations presented in this section. Table 5-2 provides a summary of the applicable design criteria for soil-reinforced SRWs.

7.2.1: Geogrid Length Requirements

Regardless of the results of external stability analyses for sliding and overturning, the minimum base width (L) shall not be less than $0.6H$ (H is the total vertical height of the wall face, including the embedded portion of the wall). The purpose of this empirical constraint on L is to prevent the construction of unusually narrow reinforced retaining walls. In addition, it is recommended that the absolute minimum value for L be 4 ft (1.2 m).

7.2.2: Geogrid Vertical Spacing Requirements

Vertical spacing of geogrid layers should also be limited to a maximum spacing, regardless of the results of the stability calculations. It is often cost efficient to maximize vertical spacing between geogrid layers as allowed by the stability factors of safety. Even when all internal and facial stability failure modes can be satisfied with greater spacing, however, a maximum vertical spacing between reinforcement layers of 24 in. (610 mm) is suggested to reduce construction stability issues. Some proprietary systems may be capable of supporting larger spacing between reinforcement layers without construction issues, however, the reinforcement spacing should not exceed 32 in. (813 mm). This maximum spacing limits construction issues and also ensures a reinforced soil mass behaves as a composite material, as intended by this design methodology. Within these limits, the wall designer should choose an appropriate maximum reinforcement spacing for the proprietary system used.

For modular blocks that are less than or equal to 10 in. (254 mm) in depth, it is recommended that the maximum vertical spacing of the reinforcement layers be no more than twice the depth of the unit. For example, the maximum vertical spacing for a 9 in. (229 mm) deep modular block would be 18 in. (457 mm). Regardless of the spacing of the reinforcement, compaction of the reinforced backfill/retained soil zone must never exceed 8 in. (203 mm) in thickness.

7.2.3: Geogrid Coverage Requirements

The design methodology presented in this manual only addresses the design of walls with 100% coverage of reinforcement in the reinforced zone. For internal and local stability calculations, this manual assumes uniform distribution of stresses along the face of the wall. To satisfy this assumption, the reinforcement layers should not have gaps between adjacent strips of reinforcement parallel to the wall face. Less than 100% coverage should not be used with this design procedure. This is the currently general practice in the design and construction of SRW's.

Section 7.3: Properties for Reinforced SRW Design

Similar to gravity SRWs, the dimensional and mechanical properties of segmental units must be established prior to design. These parameters are:

H_u = segmental unit height (ft (m))
H_{cu} = segmental unit cap (coping) height (ft (m))
W_u = segmental unit width (ft (m)) (front of unit to rear)
γ_u = weight per unit volume of segmental unit as placed (includes stone fill if applicable) (pcf (kN/m^3)
G_u = center of gravity of segmental unit from front face, using as placed weight (ft (m))
ω = wall unit inclination due to segmental unit setback (Δ_U) per course (deg)
μ_b = interface friction coefficient for base segmental unit sliding on bearing soils
a_u = apparent minimum shear capacity between segmental units (lb/ft (kN/m))
λ_u = apparent angle of friction between segmental units (deg)
Δ_U = setback per course (in.)
β_{offset} = horizontal distance from the back of the top block to the crest of the slope (ft (m))
$q_{loffset}$ = horizontal distance from the back of the top block to the beginning of a uniform live load surcharge (ft (m))
$q_{doffset}$ = horizontal distance from the back of the top block to the beginning of a uniform dead load surcharge (ft (m))
H_{ext} = height of back of reinforced wall over which the active earth pressure for external stability is calculated (ft (m))

Additionally, the properties of SRW units and the attachment between the geosynthetic reinforcement and SRW units are required. The properties listed below should be determined by laboratory testing of the SRW unit and geosynthetic reinforcement to be utilized according to ASTM D 6638 *Standard Test Method for Determining Connection Strength Between Geosynthetic Reinforcement and Segmental Concrete Units* and ASTM D 6916 *Standard Test Method for Determining the Shear Strength Between Segmental Concrete Units*.

a_{cs} = apparent minimum peak connection strength between geosynthetic reinforcement and SRW unit (lb/ ft (kN/m))
λ_{cs} = apparent angle of friction for peak connection of geosynthetic reinforcement to SRW unit (deg)
$T_{ultconn}$ = ultimate connection strength between geosynthetic reinforcement and SRW unit (lb/ft (kN/m))
a_u = apparent minimum shear strength between SRW units (lb/ft (kN/m))
λ_u = apparent angle of friction for SRW unit interface (deg)

The performance properties for each type (t) of geosynthetic reinforcement utilized in a design should be determined through the appropriate laboratory and field testing as described in Section 2.5.

$LTDS$ = Long-Term Design Strength of the geosynthetic as calculated by Equation 2-3 (lb/ft (kN/m)).
C_i = Coefficient of interaction for pullout of the geosynthetic from the reinforced soils to be used as calculated by Equation 2-4.
C_{ds} = Coefficient of direct sliding between the geosynthetic and reinforced soils to be used as calculated by Equation 2-5.

Section 7.4: External Stability of Reinforced SRWs

External stability analyses examine the stability of the mass formed by the facing units and reinforced soil zone with respect to active earth forces generated by self-weight of the retained soils and distributed surcharge pressures beyond the reinforced zone (Figure 7-1). These analyses determine the minimum length (L) of geosynthetic reinforcement by checking:

- **Base Sliding:** Outward movement of the SRW along the base of the reinforced soil mass due to insufficient shear resistance in the soil.
- **Overturning:** Rotation of the reinforced soil mass about the toe of the wall.

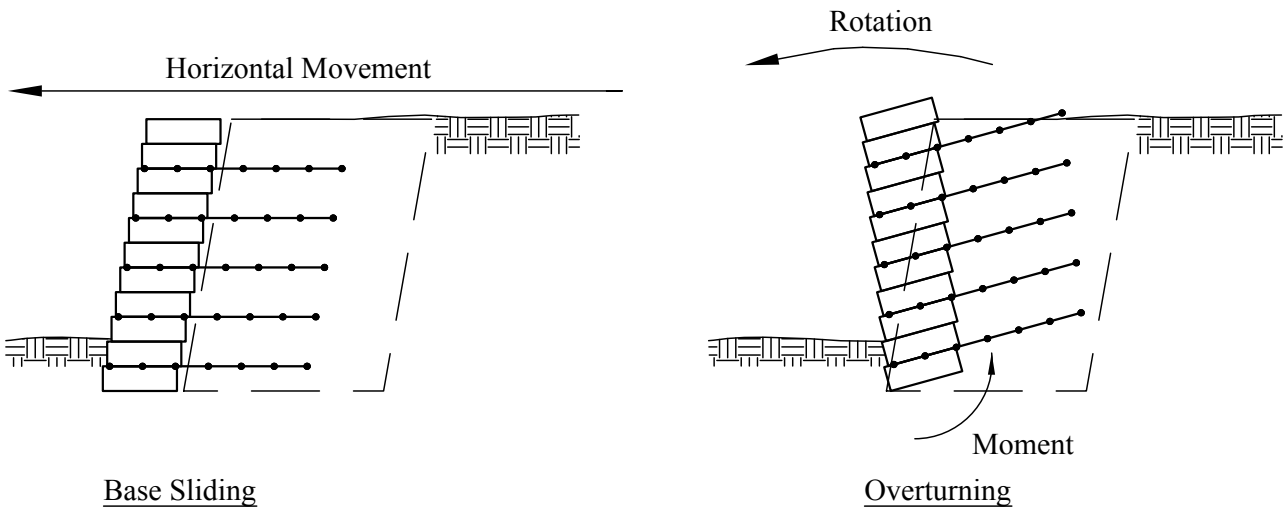

Figure 7-1: External Earth Pressures

External stability calculations for reinforced SRW structures consider the reinforced zone of infill soil and the dry-stacked column of SRW units to act as a monolithic gravity mass.

The distribution of earth pressures acting at the back of the reinforced zone due to the retained soil self-weight and surcharge loadings are shown in Figure 7-2.

The active earth pressure coefficient (K_{aext}) is calculated using Equation 7-1 and is a function of the peak friction angle of the retained soil (ϕ_r) the backslope angle for external analysis (β_{ext}), facing inclination angle (ω), and the external interface friction angle (δ_e). The lateral earth pressure is assumed to be applied perpendicular to the plane inclined at ω defining the back of the reinforced soil mass as altered by the interface friction angle (δ_e) (Figure 7-2). Since δ_e is assumed to mobilize full soil shearing resistance along the back of the reinforced zone equal to the lower peak friction angle of the retained or reinforced (infill) soil, a downward inclined lateral pressure distribution results for most wall inclinations (i.e., δ_e must be greater than ω).

$$K_{aext} = \frac{\cos^2(\phi_r + \omega)}{\cos^2\omega\cos(\omega - \delta_e)\left[1 + \sqrt{\dfrac{\sin(\phi_r + \delta_e)\sin(\phi_r - \beta_{ext})}{\cos(\omega - \delta_e)\cos(\omega + \beta_{ext})}}\right]^2} \qquad \text{[Eq. 7-1]}$$

where:

$$\delta_e = \text{lesser of } \phi_i \text{ or } \phi_r \qquad \text{[Eq. 7-2]}$$

β_{ext} = the slope, or equivalent slope, behind back of reinforced zone used for external earth pressure calculations (see Equations 7-9 A, B, or C)

7.4.1: Wall Geometry Dimensions for External Analyses

The back of the reinforced soil zone is taken as a surface inclined at ω to the vertical (i.e., parallel to the inclined wall face) and located a distance L from the front face. For a complete definition of L, see Section 7.1.2. As summarized here, L for external analysis is the base width of the reinforced soil mass. Even if there are some longer layers at the bottom or top of the wall, the length of the shorter primary layers of reinforcement within the reinforced zone are used to determine L. However, the base width of the reinforced zone L used for external stability calculations should not be reduced to

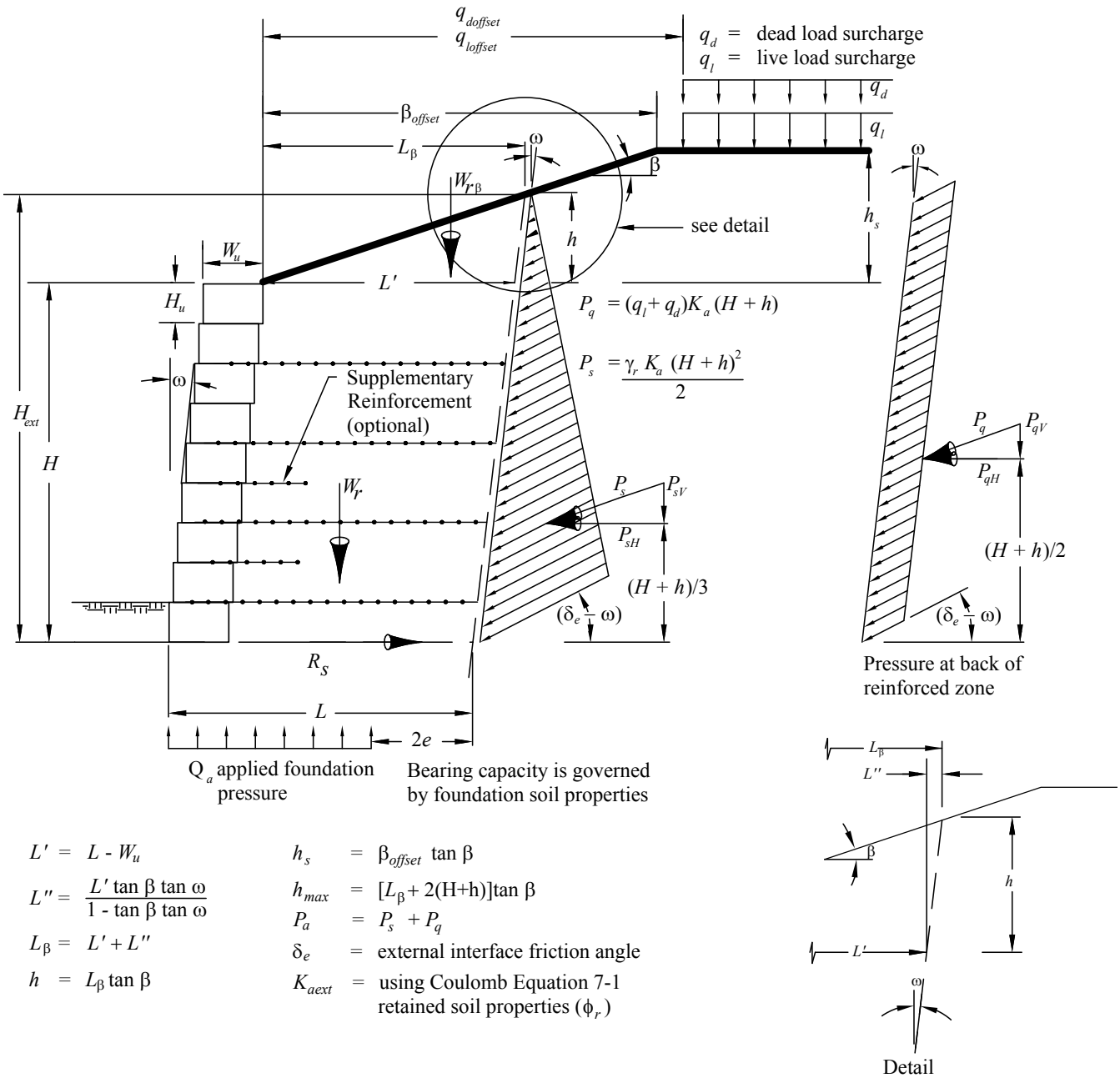

$L' = L - W_u$

$L'' = \frac{L' \tan\beta \tan\omega}{1 - \tan\beta \tan\omega}$

$L_\beta = L' + L''$

$h = L_\beta \tan\beta$

$h_s = \beta_{offset} \tan\beta$

$h_{max} = [L_\beta + 2(H+h)]\tan\beta$

$P_a = P_s + P_q$

δ_e = external interface friction angle

K_{aext} = using Coulomb Equation 7-1 retained soil properties (ϕ_r)

Figure 7-2: External Stability—Geometry and Forcess (Slope Case B Shown)

the length of supplementary layers. Also, truncation of a primary geogrid layer in a limited area need not always and automatically be deemed to reduce the base width of reinforced zone L, see Section 7.1.2 for further discussion.

Dimensions used for external analysis are determined for various top-of-wall (geometric) conditions. These include the height at the back of the reinforced mass over which this earth pressure is exerted (H_{ext}), the slope angle behind the reinforced mass used for external earth pressure calculations (β_{ext}) and the horizontal width of the reinforced mass (L_β), at the intersection of the back of reinforcement with the top of wall grade. These variables are a function of the geometry of the grades at top of the wall and behind the reinforced mass.

Top-of-wall geometry will influence the calculation of these values. H_{ext}, β_{ext}, and L_β are calculated by locating the crest of the slope above the top of the reinforced zone; including the vertical height (above the reinforced zone) (h)

of a wall backslope that is continuous to the back of the reinforced zone, the height of the crest of a broken slope (h_s), and the height of a continuous slope extended horizontally to the maximum external influence zone (h_{max}) (see Figures 7-3, 7-4, 7-5, respectively). The horizontal distance to the crest of a broken slope from the back of the top unit (β_{offset}) is used to determine h_s.

Behind the base width of reinforced zone length (L) the extra horizontal distance that the projection of the back of the reinforced mass makes when extended to a top slope is called L'' for a slope that is continuous to this distance or called L''_s for a broken slope that crests before reaching this distance.

These geometric values are calculated as follows:

$$L' = L - W_u \qquad \text{[Eq. 7-3]}$$

$$L'' = \frac{L' \tan(\beta) \tan(\omega)}{1 - \tan(\beta) \tan(\omega)} \qquad \text{[Eq. 7-4]}$$

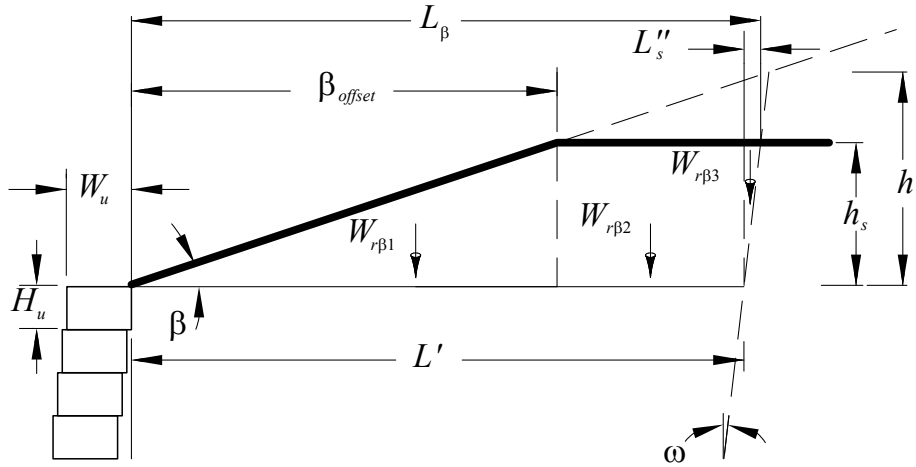

Figure 7-3: Broken Back—Top of Wall Forces and Geometry–CASE A

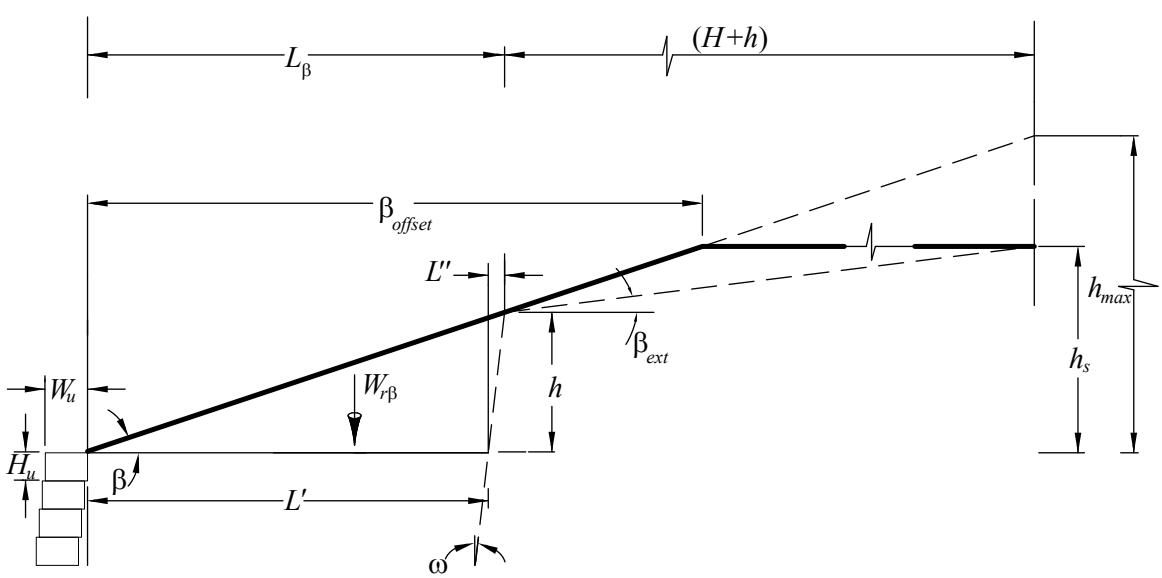

Figure 7-4: Broken Back—Top of Wall Forces and Geometry–CASE B

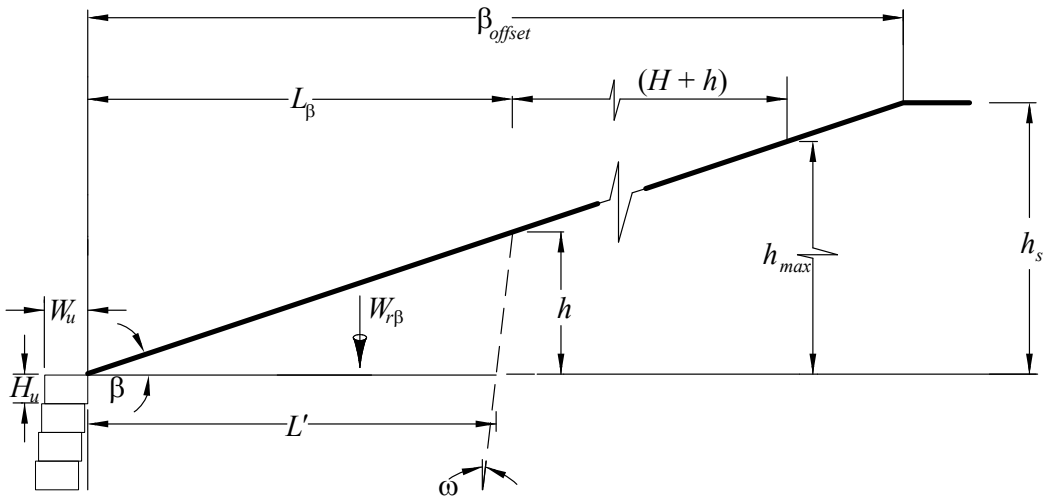

Figure 7-5: Broken Back—Top of Wall Forces and Geometry–CASE C

$$h = (L' + L'')\tan\beta \qquad \text{[Eq. 7-5]}$$

$$h_{\max} = \tan\beta\left[(L' + L'') + (H + h)\right] \qquad \text{[Eq. 7-6]}$$

$$h_s = \beta_{offset}\tan\beta \qquad \text{[Eq. 7-7]}$$

$$L_s'' = h_s \tan\omega \qquad \text{[Eq. 7-8]}$$

The maximum influence zone for external analysis is defined as the horizontal distance of $H + h$ behind the back of reinforced zone. This marks the estimated distance after which a break in a slope will no longer significantly reduce the soil pressure on a wall. It also marks the distance to which an equivalent slope is drawn, to best model the effect of a broken slope on the earth pressures.

From these values, the dimensions of H_{ext}, β_{ext} and L_β are calculated in different manners for each top of wall/slope case:

For Slope—Case A: $h_s \le h$ (broken slope crests above reinforced mass)

$$\beta_{ext} = 0^\circ \qquad \text{[Eq. 7-9A]}$$

$$H_{ext} = H + h_s \qquad \text{[Eq. 7-10 A]}$$

$$L_\beta = L' + L_s'' \qquad \text{[Eq. 7-11 A]}$$

For Slope—Case B: $h < h_s \le h_{max}$ (slope crests behind reinforced mass but within influence zone)

$$\beta_{ext} = \tan^{-1}\left[\frac{h_s - h}{(H + h)}\right] \qquad \text{[Eq. 7-9B]}$$

$$H_{ext} = H + h \qquad \text{[Eq. 7-10B]}$$

$$L_\beta = L' + L''$$ [Eq. 7-11B]

For Slope—Case C: $h_s > h_{max}$ (infinite slope or broken slope that crests beyond influence zone)

$$\beta_{ext} = \beta$$ [Eq. 7-9C]

$$H_{ext} = H + h$$ [Eq. 7-10C]

$$L_\beta = L' + L''$$ [Eq. 7-11C]

For Level Grade—Case D:

For a horizontal backslope, $\beta = 0$, the values h and h_s and L'' and L''_s in Equations 7-4, 7-5, 7-7 and 7-8 all equal 0 and any of the slope case equations (Equations 7-9, 7-10 and 7-11 apply), yielding the following results:

$$\beta_{ext} = \beta$$ [Eq. 7-9D]

$$H_{ext} = H$$ [Eq. 7-10D]

$$L_\beta = L'$$ [Eq. 7-11D]

7.4.1.1: External Earth Forces and Locations

The distribution of earth pressures acting at the back of the reinforced zone due to the retained soil self-weight and surcharge loadings are shown in Figure 7-2.

The earth force P_s due to the retained soil self-weight is calculated as follows:

$$P_s = 0.5 K_{aext} \gamma_r (H_{ext})^2$$ [Eq. 7-12]

The earth force due to a uniformly distributed live load surcharge q_1 and dead load surcharge q_d acting over the retained soil surface is:

$$P_q = (q_1 + q_d) K_{aext} (H_{ext})$$ [Eq. 7-13]

<u>Horizontal Components</u>

The horizontal component of P_s is calculated as follows:

$$P_{sH} = 0.5 K_{aext} \gamma_r (H_{ext})^2 \cos(\delta_e - \omega)$$ [Eq. 7-14]

The horizontal component of P_q when acting as a driving force in stability calculation is calculated as follows:

$$P_{qdH} = (q_d) K_{aext} H_{ext} \cos(\delta_e - \omega)$$ [Eq. 7-15]

$$P_{qlH} = (q_l) K_{aext} H_{ext} \cos(\delta_e - \omega)$$ [Eq. 7-16]

Therefore, the total horizontal active earth force P_a acting at the back of the reinforced soil zone is:

$$P_{aH} = P_{sH} + P_{qdH} + P_{qlH}$$ [Eq. 7-17]

The horizontal components of the forces P_{sH} and P_{qH} are assumed to act at distances of Y_s and Y_q, respectively above the heel of the lowermost SRW unit respectively. These distances are computed as:

$$Y_s = \frac{H_{ext}}{3} \qquad \text{[Eq. 7-18]}$$

$$Y_q = \frac{H_{ext}}{2} \qquad \text{[Eq. 7-19]}$$

Vertical Components

As discussed in Section 5.4.3, the vertical components of earth force due to retained soil P_{sV} are considered in the analysis as well as the vertical component of earth force due to surcharge P_{qV}

The vertical component of P_s is calculated as follows:

$$P_{sV} = 0.5K_{aext}\gamma_r(H_{ext})^2 \sin(\delta_e - \omega) \qquad \text{[Eq. 7-20]}$$

The vertical component of P_q is calculated as follows:

$$P_{qdV} = (q_d)K_{aext}(H_{ext})\sin(\delta_e - \omega) \qquad \text{[Eq. 7-21]}$$

$$P_{qlV} = (q_l)K_{aext}(H_{ext})\sin(\delta_e - \omega) \qquad \text{[Eq. 7-22]}$$

Therefore, the total vertical active earth force P_{aV} acting at the back of the reinforced soil zone is:

$$P_{aV} = P_{sV} + P_{qdV} + P_{qlV} \qquad \text{[Eq. 7-23]}$$

Because of the transient nature of the live load surcharge, q_l, it is not considered to contribute to the stabilizing vertical forces that occur in resisting force equations. The vertical components of the dead and live load surcharges, P_{qdV} and P_{qlV}, are accounted for separately, to allow this distinction.

The vertical components of the forces P_{sV} and P_{qV} are assumed to act at distances of X_s and X_q, respectively, from the toe of the lowermost SRW unit respectively. These distances are computed as:

$$X_s = L + (\frac{H_{ext}}{3})\tan\omega \qquad \text{[Eq. 7-24]}$$

$$X_q = L + (\frac{H_{ext}}{2})\tan\omega \qquad \text{[Eq. 7-25]}$$

7.4.1.2: Offset Dead Surcharge Loads ($q_{doffset}$) and Geometry for Resisting Equations

If the horizontal offset of a dead surcharge load: $q_{doffset}$ is located: a) beyond the internal failure plane d_{int} or b) beyond the reinforced mass (L_β), the dead load is considered not to contribute to stabilizing the reinforced wall mass against overturning and sliding. In external stability calculations, dead surcharge loads that are offset beyond this distance are treated in the same manner as a live load and are not added to resisting force equations.

The determination of the horizontal influence distance d_{int} for a dead load depends on top of wall geometry and the angle of internal failure plane α_i that is defined later in Section 7.5.1.3: *Internal Failure Plane*. The horizontal

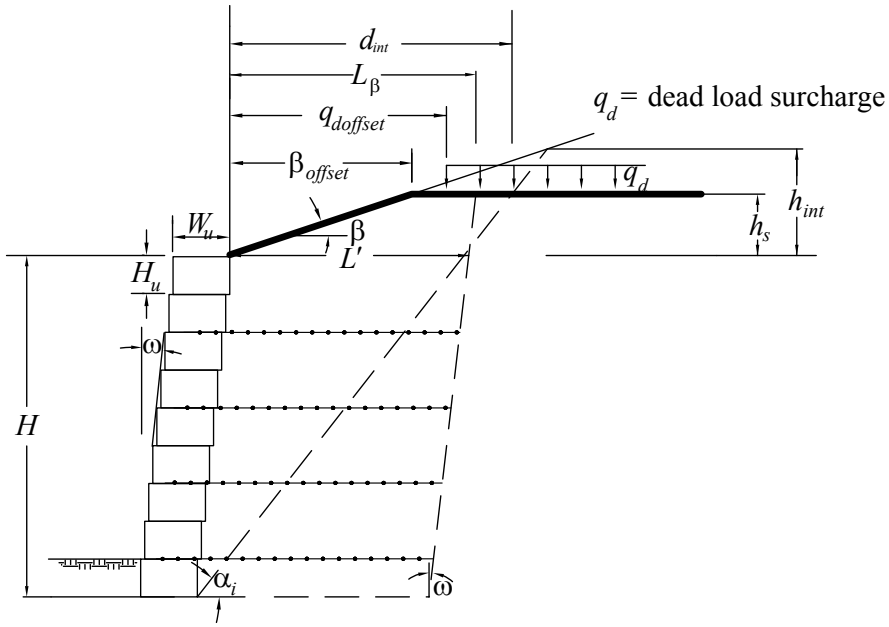

CASE A - Broken Slope Height (h_s) crests below Height of Intersection (h_{int})

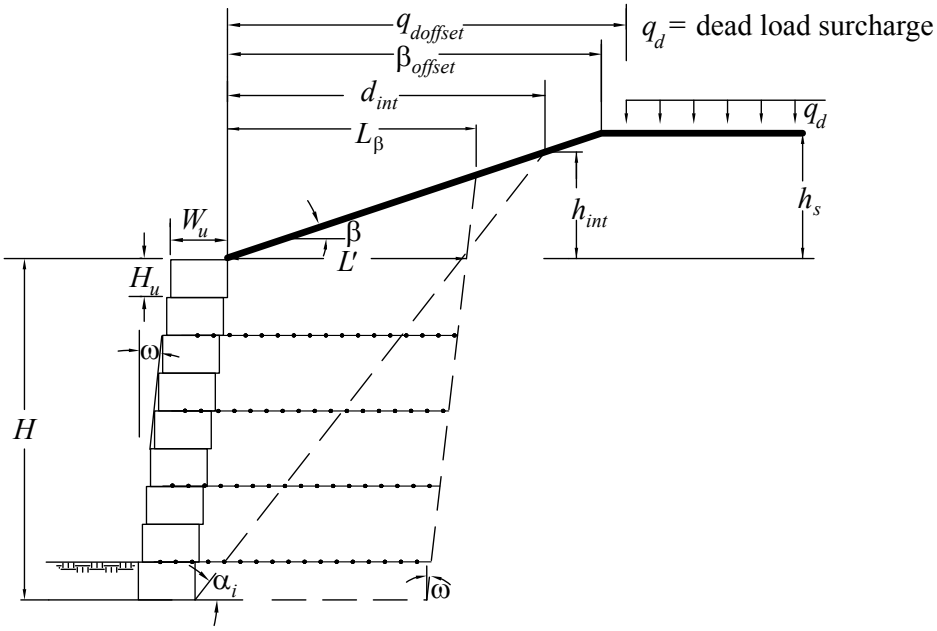

CASE B - Infinite Slope or Broken Slope Height (h_s) crests at or above Height of Intersection (h_{int})

Figure 7-6: Influence of Dead Surcharge Loads

distance from the back of the wall units to the intersection of the internal failure plane with top grade can be determined for each top-of-wall case. First, the height above the reinforced mass (h_{int}) at the intersection of a continuous slope with the internal failure plane is determined:

$$h_{int} = \frac{H\left(1 - \tan\omega \tan\alpha_i\right)}{\left(\tan\alpha_i - \tan\beta\right)} \tan\beta \qquad \text{[Eq. 7-26]}$$

This horizontal influence distance is calculated differently for each top-of-wall/slope condition:

For Slope Case A $h_s \leq h_{int}$ (broken slope crests below height of intersection):

$$d_{int} = \frac{H + h_s}{\tan\alpha_i} - H\tan\omega \qquad \text{[Eq. 7-27A]}$$

For Slope Case B $h_s > h_{int}$ (infinite slope, or broken slope that crests at or above intersection):

$$d_{int} = \frac{H + h_{int}}{\tan\alpha_i} - H\tan\omega \qquad \text{[Eq. 7-27B]}$$

For Level Grade

For $\beta = 0$ and h_{int} or $h_s = 0$, either Equations 7-27A or B can be used to determine d_{int}.

Influence Distance for Offset Dead Loads

In the case where the horizontal offset of the dead load $q_{doffset}$ (Figure 7-6) is greater than the influence distance (d_{int}) or the width of the reinforced mass (L_β) then the dead load is removed for the resisting forces determined in Sections 7.4.2, 7.4.3, 7.5.4 and 7.5.5:

$q_{doffset} > d_{int}$ or $q_{doffset} > L_\beta$,
q_d and P_{qdV} are removed from the resisting forces (Equations 7 – 32, 41, 63, and 75) [Eq. 7-28]

In the case where the horizontal offset of the dead load $q_{doffset}$ (Figure 7-6) is less than the influence distance (d_{int}) and the reinforced mass (L_β) then the dead load is conservatively applied in the resisting forces over a reduced length $L_{\beta q}$ at the bottom of the soil mass, in Sections 7.4.2, 7.4.3, and 7.5.5:

$L_{\beta q} = L_\beta - (H + h)\tan\omega - q_{doffset}$ ($L_{\beta q}$ replaces L_β in Equations 7-32, 34, 37, 42 and 75) [Eq. 7-29]

Increasing one reinforcement length will not increase the dead loads accounted for in the design. To increase the dead load included the minimum geogrid length (L) in the wall section has to be increased.

7.4.1.3: Soil Weights

The weights of the soil and the dry-stacked column of SRW facing units (W_{ri}) and the weight of the soil above the top of wall (when there is a backslope) ($W_{r\beta}$) act on the base of the reinforced soil mass, also contribute to the resisting moments. To simplify calculation of W_{ri}, the unit weight of the reinforced (infill) soil and facing units are assumed to be equal (i.e $\gamma_u = \gamma_i$). Provided that there is less than a 25% difference between γ_i and γ_u, this assumption has no significant effect on design since the relative contribution of the column of facing units to the mass of the reinforced (infill) soil zone is small.

Hence, the weight of the reinforced mass (W_{ri}) including facing units can be calculated as follows:

$$W_{ri} = L\gamma_i H \qquad \text{[Eq. 7-30]}$$

If a backslope is present, the weight of soil in the slope above the reinforced zone ($W_{r\beta}$) is calculated differently depending on the geometry of the slope:

For Slope Case A (Figure 7-3): $h_s \leq h$ (broken slope crests above reinforced mass)

$$W_{r\beta} = W_{r\beta 1} + W_{r\beta 2} + W_{r\beta 3} \qquad \text{[Eq. 7-31A]}$$

Where:

$$W_{r\beta 1} = \frac{\beta_{offset} \times h_s}{2} \times \gamma_i \qquad \text{[Eq. 7-31A1]}$$

$$W_{r\beta 2} = \left[\left(L' - \beta_{offset}\right) \times h_s\right] \times \gamma_i \qquad \text{[Eq. 7-31A2]}$$

$$W_{r\beta 3} = \frac{h_s^{\,2} \times \tan\omega}{2} \times \gamma_i \qquad \text{[Eq. 7-31A3]}$$

For Slope Case B (Figure 7-4): $h_s > h$ (broken slope that crests behind reinforced zone or infinite slope)

$$W_{r\beta} = \frac{L'\gamma_i h}{2} = \frac{L'\gamma_i L_\beta \tan\beta}{2} \qquad \text{[Eq. 7-31B]}$$

7.4.2: Base Sliding

The lateral stability of the reinforced zone is maintained by base sliding resistance (R_s) as shown in Figure 7-7. The magnitude of the base sliding resistance (R_s) is assumed to be controlled by the shear strength of the weakest soil at the base of the wall. Therefore the least resistance R_s, defined by Equations 7-32A through 7-32C is utilized in base sliding stability calculations as follows:

If reinforced (infill) soil controls:

$$R_S = C_{ds}(q_d L_\beta + W_{ri} + W_{r\beta} + (P_{sV} + P_{qdV}))\tan\phi_i \qquad \text{[Eq. 7-32A]}$$

If gravel fill controls:

$$R_S = C_{ds}(q_d L_\beta + W_{ri} + W_{r\beta} + (P_{sV} + P_{qdV}))\tan\phi_d \qquad \text{[Eq. 7-32B]}$$

If foundation soil controls:

$$R_S = C_{ds}[c_f L + (q_d L_\beta + W_{ri} + W_{r\beta} + (P_{sV} + P_{qdV}))\tan\phi_f] \qquad \text{[Eq. 7-32C]}$$

If the dead load surcharge is offset, the term L_β in the above equations may need to be replaced by the term $L_{\beta q}$ (Equation 7-29) or q_d may need to be removed entirely (Equation 7-28), depending on top-of-wall geometry.

The coefficient of direct sliding C_{ds} should be assigned a value of 1.0 in Equations 7-32A through 7-32C above, unless a layer of geosynthetic reinforcement or geotextile filter is placed at the base of the first course of SRW units. *In fact, SRWall Version 4.0 does not allow the value of C_{ds} to be other than 1.0 for external sliding.* Placement of geosynthetics

at the bearing pad elevation may create a reduced sliding resistance. Note that only the dead load portion of the distributed surcharge pressure is considered in these expressions (Equations 7-32A through 7-32C) for base resistance (see Section 5.6.3.1).

The total driving horizontal force P_{aH} that is exerted against the base resistance is defined earlier in Section 7.4.1.1, Equation 7-17.

The factor of safety against base sliding (FS_{s1})is based on the smallest value of R_s calculated from Equations 7-32A-C determined as follows:

$$FS_{sl} = \frac{R_s}{P_{aH}} \qquad \text{[Eq. 7-33]}$$

If the calculated factor of safety against sliding (FS_{s1}) is less than the design value (typically 1.5, see Table 5-2), then the trial base reinforcement length (L) should be increased and the analysis repeated. For many routine structures, the length of the reinforced zone, and hence the minimum length of the geosynthetic reinforcement layers, will be controlled by this external base sliding failure mechanism.

7.4.3: Overturning

Conventional engineering design practice for reinforced soil walls is to ensure the reinforced soil zone is stable with respect to overturning about the toe of the wall (point O in Figure 7-7). The flexibility of reinforced SRWs makes it unlikely that the gravity mass would actually overturn in practice; however, an adequate factor of safety against overturning will limit excessive outward tilting and distortion of the SRW face [Ref. 19].

7.4.3.1: Resisting Moments

The moments resisting overturning are due to the self-weight of the reinforced zone and any dead load surcharge (q_d) acting over the reinforced zone.

The sum of the resisting moments M_r is calculated as follows:

For Slope Case A: $h_s \leq$ h (broken slope crests above reinforced mass)

$$\begin{aligned} M_r = &\left[W_{ri}X_{ri} + [W_{r\beta 1}X_{r\beta 1} + W_{r\beta 2}X_{r\beta 2} + W_{r\beta 3}X_{r\beta 3}] + q_d L_\beta X_{q\beta}\right] \\ &+ \left[P_{qdV}X_q\right] + \left[P_{sV}\ X_s\right] \end{aligned} \qquad \text{[Eq.7-34A]}$$

For Slope Case B: $h_s >$ h (broken slope that crests behind reinforced zone or infinite slope)

$$M_r = [W_{ri}X_{ri} + W_{r\beta}X_{r\beta} + q_d L_\beta X_{q\beta}] + [P_{qdV}X_q] + [P_{sV}X_s] \qquad \text{[Eq. 7-34B]}$$

For Level Grade When $\beta = 0$ and $W_{r\beta} = 0$:

Equation 7-34B can be used to determine M_r for level top grade.

The vertical components P_{sV} and P_{qdV} that provide additional resisting forces, as shown in Figure 7-7, are calculated in Equations 7-20 and 7-21 and the soil weights W_{ri} and $W_{r\beta}$ are calculated in Equations 7-30 and 7-31A.

$h = L_\beta \tan\beta$
$L' = L - W_u$

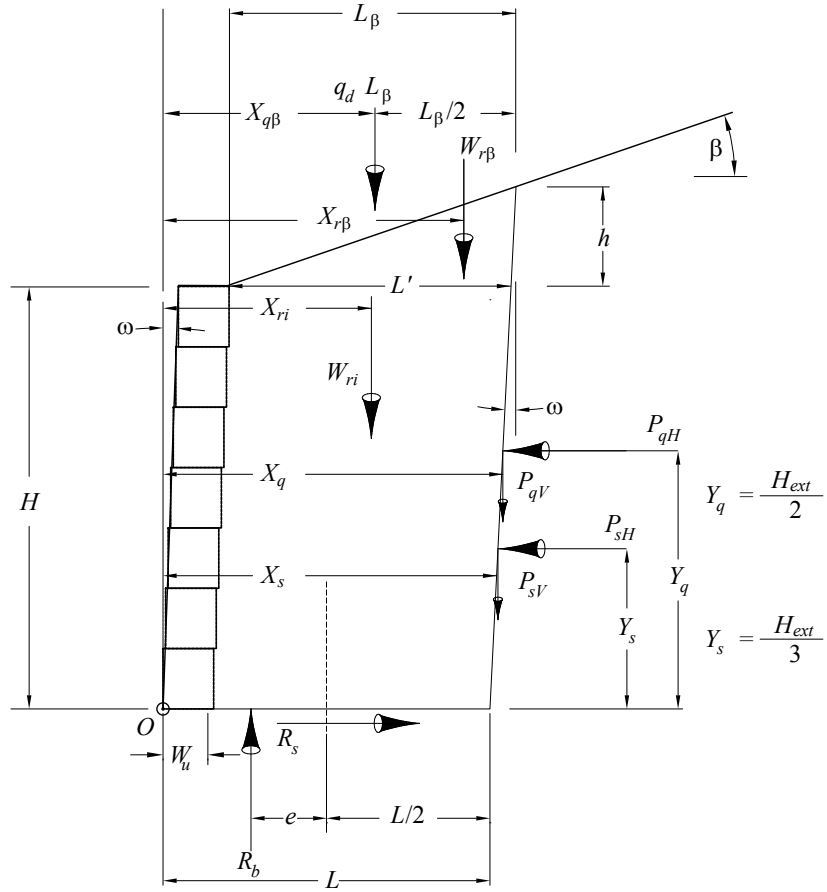

L = min. length of reinforcement

$R_b = W_{ri} + W_{r\beta} + q_d L_\beta$

Figure 7-7: Free Body Diagram—(Slope Case B Shown)

As discussed in Section 7.4.1.2, if the dead surcharge load is offset, the term L_β in the above equations may need to be replaced by the term $L_{\beta q}$ (Equation 7-29) or q_d may need to be removed entirely (Equation 7-28), depending on top-of-wall geometry.

Moment Arms

The moment arms (X_q and X_s) shown in Figure 7-7 and used in Equations 7-34 A and B are the arms for the vertical components of resisting earth forces (P_{qdV} and P_{sV}). These moment arms (X_q and X_s) are calculated by Equations 7-24 and 7-25 shown in Section 7.4.1.1 *External Earth Forces and Locations*.

The other moment arms (the other X terms in Equations 7-34 A and B), which are for the resisting force of the soil weights and surcharges, are calculated as follows:

Resisting moment arm for reinforced fill zone:

$$X_{ri} = \frac{(L + H\tan\omega)}{2} - 0.5\Delta_U \qquad \text{[Eq. 7-35]}$$

Resisting moment arms for the soil in the top slope:

For Slope Case A: $h_s \leq h$ (broken slope crests above reinforced mass)

$$X_{r\beta 1} = H \tan\omega + W_u + \tfrac{2}{3}\beta_{offset} \qquad \text{[Eq. 7-36A1]}$$

$$X_{r\beta 2} = H \tan\omega + W_u + \beta_{offset} + \frac{L' - \beta_{offset}}{2} \qquad \text{[Eq. 7-36 A2]}$$

$$X_{r\beta 3} = H \tan\omega + W_u + L' + \frac{h_s \tan\omega}{3} \qquad \text{[Eq. 7-36A3]}$$

For Slope Case B: $h_s > h$ (broken slope that crests behind reinforced zone or infinite slope)

$$X_{r\beta} = H \tan\omega + W_u + \tfrac{2}{3}L' \qquad \text{[Eq. 7-36B]}$$

Resisting moment arm for surcharge on a slope:

$$X_{q\beta} = L + \left[(H_{ext})\tan\omega\right] - \frac{L_\beta}{2} \qquad \text{[Eq. 7-37]}$$

If the dead surcharge load is offset, the term L_β in the above equation may need to be replaced by the term $L_{\beta q}$ (Equation 7-29), if q_d has not been removed entirely (Equation 7-28).

7.4.3.2: Overturning (Driving) Moments

The sum of the driving moments (M_o) due to the horizontal earth forces acting at the back of the reinforced soil zone are calculated as follows:

$$M_O = P_{sH}Y_s + (Y_q)(P_{qdH} + P_{qlH}) \qquad \text{[Eq. 7-38]}$$

The horizontal driving forces (P_{sH} and P_{qH}) and their moment arms (Y_s and Y_q) are calculated in Section 7.4.1.1 in Equations 7-14, 7-15, 7-16, 7-18 and 7-19 as shown in Figure 7-7.

7.4.3.3: Overturning Factor of Safety

The factor of safety with respect to overturning (FS_{ot}) is calculated as follows:

$$FS_{ot} = \frac{M_r}{M_o} \qquad \text{[Eq. 7-39]}$$

The magnitude of FS_{ot} is typically controlled in any design section by adjusting the length of the base reinforcement length (L). A typical minimum recommended value for FS_{ot} is 2.0 (see Table 5-2)

7.4.4: Bearing Pressures for Geotechnical Foundation Analysis

While bearing capacity and foundation settlement is generally evaluated by the project geotechnical engineer, the wall design engineer should determine the driving loads, in the form of bearing pressures, on the foundation materials to compare to the capacity values determined by the geotechnical engineer. Conventional bearing

capacity analyses are carried out with respect to the base width (L) of the reinforced (infill) soil mass, as explained in Section 12. The reinforced (infill) soil mass is assumed to act as a continuous strip footing and must have sufficient width (L) to prevent overstressing of the foundation soils that may lead to shear failure of the foundation soils or excessive settlement.

In this design manual, the conventional Meyerhof stress distribution approach is adopted. It is utilized to ensure a conservative estimate of applied bearing stress. The effect of eccentricity of the resultant bearing force (net foundation load) is to restrict compressive bearing pressures to an equivalent bearing area (B) calculated as:

$$B = L - 2e \qquad \text{[Eq. 7-40]}$$

Here e is the eccentricity of the foundation load R_b (Figure 7-7). The quantity (e) can be calculated by summing moments about the center of the base length (L/2) with counter-clockwise being positive:

$$e = \frac{L}{2} - \frac{M_r - M_o}{W_{ri} + W_{r\beta} + q_d L_\beta + (P_{sV} + P_{qdV})} \qquad \text{[Eq. 7-41]}$$

If the dead surcharge load is offset, the term L_β in the above equation may need to be replaced by the $L_{\beta q}$ term (Equation 7-28), if q_d has not been removed entirely (Equation 7-27).

This design manual utilizes base eccentricity (e) solely to calculate an equivalent footing width B to ensure a conservative calculation of applied bearing pressure. Throughout this manual, the vertical stress at any point used to calculate lateral stress will be the conventional overburden stress (σ_v) (Equation 5-2), appropriate for Coulomb earth pressure theory. This assumption of a uniform vertical stress distribution is substantiated by data from instrumented test walls [Refs. 31, 33, 39, 40, 42, and 43].

The applied bearing pressure (Q_a) acting over the equivalent bearing width (B) is:

$$Q_a = \frac{[W_{ri} + W_{r\beta} + (q_l + q_d)L_\beta] + P_{aV}}{B} \qquad \text{[Eq. 7-42]}$$

For many projects, the site geotechnical engineer may have established an allowable bearing pressure for the foundation soils, which include a settlement and bearing capacity criteria. The calculated Q_a should be less than the allowable bearing pressure established by the geotechnical engineer; if not, consultation with the geotechnical engineer is suggested. If the calculated bearing pressure (Q_a) is greater than the allowable pressure provided by the geotechnical engineer or the FS_{bc} calculated in Section 12 is less than the minimum design value (typically FS_{bc} = 2.0, see Table 5-2), consultation with the geotechnical engineer is suggested. While bearing pressure and some settlement concerns might be reduced slightly by increasing L, bearing pressure will never be less than the self-weight of the reinforced zone soil fill. For more strategies to handle difficult foundation conditions and discussion of geotechnical engineering foundation analysis below a SRW, see Section 12.

Section 7.5: Internal Stability of Reinforced SRWs

Internal stability analyses examine the effectiveness of the geosynthetic reinforcement in holding the reinforced soil mass together so the geosynthetic layers and soil function as a monolithic block. The internal stability analyses determine the minimum strength, number, and vertical spacing of reinforcement layers by examining:

- **Tensile Overstress:** When the applied tensile stress in the geosynthetic reinforcement exceeds an established, product-specific, allowable working stress level.

- **Pullout:** Excessive movement of the geosynthetic through the reinforced soil zone, generally without rupture of the reinforcement.
- **Internal Sliding:** Geosynthetic reinforcement layers may create preferred planes of sliding at elevations along the height of the wall.

Internal stability calculations are carried out to evaluate the integrity of the reinforced zone as a monolithic composite comprised of geosynthetic reinforcement, soil and SRW units. The internal forces to be resisted by horizontal reinforcement layers are calculated using Coulomb lateral earth pressure theory as discussed in Section 5.4. Tensile overstress, pullout and internal sliding failure modes as shown in Figure 7-8 must be examined.

These assumptions are the essence of the "tied-back wedge method" of analysis and are a common element of most limit equilibrium based methods of internal stability analysis for geosynthetic reinforced soil walls [Refs. 7, 19 and 36]. The tied-back wedge analysis refers to the lateral stability provided by the horizontal layers of geosynthetic reinforcement to anchor the wedge-shaped zone of failed soil identified in Figure 7-12. All geosynthetic reinforcement layers must have sufficient length to develop adequate anchorage capacity beyond the internal plane of failure to prevent excessive deformation (pullout) of the reinforcement through the soil.

The tied-back wedge method for internal stability is used to determine the number, strength, and vertical spacing of geosynthetic reinforcement layers in the reinforced zone. The length of the reinforced (infill) soil mass (L) determined from external stability calculations normally controls the length of reinforcement layers. In some instances, however, the length of the uppermost geosynthetic layer(s) might have to be extended to provide adequate anchorage (pullout capacity). The local extension of one or more layers near the top of the wall does not affect the boundaries of the reinforced soil zone for external stability calculations (Section 7.1.2).

Incorporation of geosynthetic reinforcement into the reinforced zone may create a preferred path for outward sliding. Internal sliding analyses must be carried out to check that this failure mechanism is prevented. The potential for direct sliding increases for geosynthetics (especially geotextiles) that have a lower interface friction angle with the surrounding soil than the peak friction angle of the soil itself (i.e., $C_{ds} < 1.0$).

The location of the reinforcement layers is typically determined by a trial and error approach while recognizing that lateral earth pressures increase linearly with depth below the crest of the wall. Consequently, the vertical spacing between reinforcement layers can be expected to decrease with depth in taller structures. Alternatively, for uniformly vertical spacing of geogrids, need for higher-strength geogrids can be expected with depth. The distribution of reinforcement layers will also be influenced by the strength of geosynthetic connections to facing units and the stability of the unreinforced portion of units at the top of the wall (crest toppling).

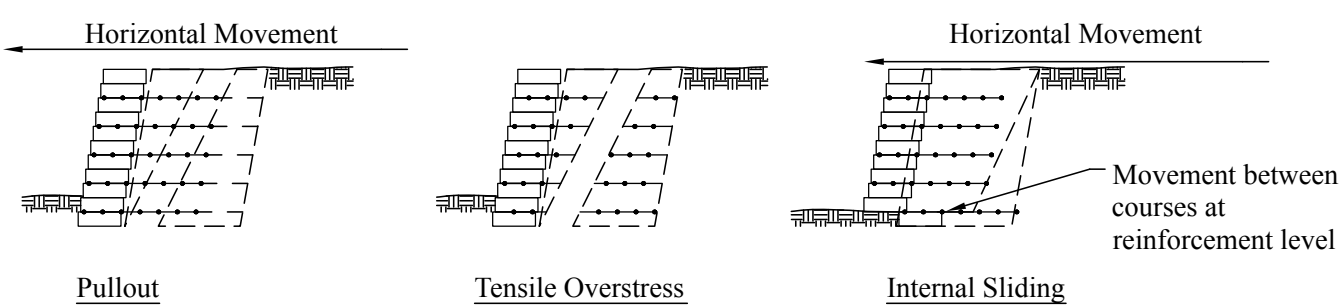

Figure 7-8: Main Modes of Failure for Internal Stability

7.5.1: Internal Earth Pressures and Failure Plane

For internal stability calculations, the lateral earth pressure due to reinforced (infill) soil self-weight and imposed surcharge loadings (q_d and q_l) is assumed to be linearly distributed with depth, and is derived from the internal active earth pressures coefficient K_{aint} acting at an angle δ_i to the horizontal direction at the back of the SRW units (Figure 7-11). The vertical stress σ_v (Equation 5-2) utilized to calculate lateral K_{aint} is the overburden pressure. The active earth pressure coefficient K_{aint} for internal stability analyses is calculated using Equation 7-43 together with the reinforced (infill) soil peak friction angle (ϕ_i), interface friction angle (δ_i), and facing inclination angle (ω). The earth pressures used to determine internal stresses on geosynthetic layers are assumed to act over the height of the wall face (H). The earth pressure is assumed to act perpendicular to the wall inclination (ω) as altered by the internal interface frictional angle (δ_i). To ensure that the friction mobilized along the back of the concrete facing units results in a downward inclined lateral pressure distribution, the wall inclination (ω) must be less than δ_i. Under these conditions, the influence of the vertical component of internal earth pressures on stability analyses is conservatively ignored for internal analysis of overstress and pullout (Sections 7.5.1.2, 7.5.3, and 7.5.4) to simplify calculations.

$$K_{aint} = \frac{\cos^2(\phi_i + \omega)}{\cos^2\omega\cos(\omega - \delta_i)\left[1 + \sqrt{\frac{\sin(\phi_i + \delta_i)\sin(\phi_i - \beta_{int})}{\cos(\omega - \delta_i)\cos(\omega + \beta_{int})}}\right]^2} \qquad \text{[Eq. 7-43]}$$

Where:

$$\delta_i = 2/3\ \phi_i \qquad \text{[Eq. 7-44]}$$

β_{int} = top of wall slope, or equivalent slope, used for internal earth pressure (see Equations 7- 46A or B)

7.5.1.1: Backslope Geometry for Internal Earth Pressures

The maximum influence zone for internal analysis is defined as the horizontal distance of 2H from top of wall face (at back of top unit). This marks the estimated distance after which a crest in a slope will no longer significantly reduce the internal soil pressure on the reinforced wall. It also marks the distance to which an equivalent slope is drawn, to

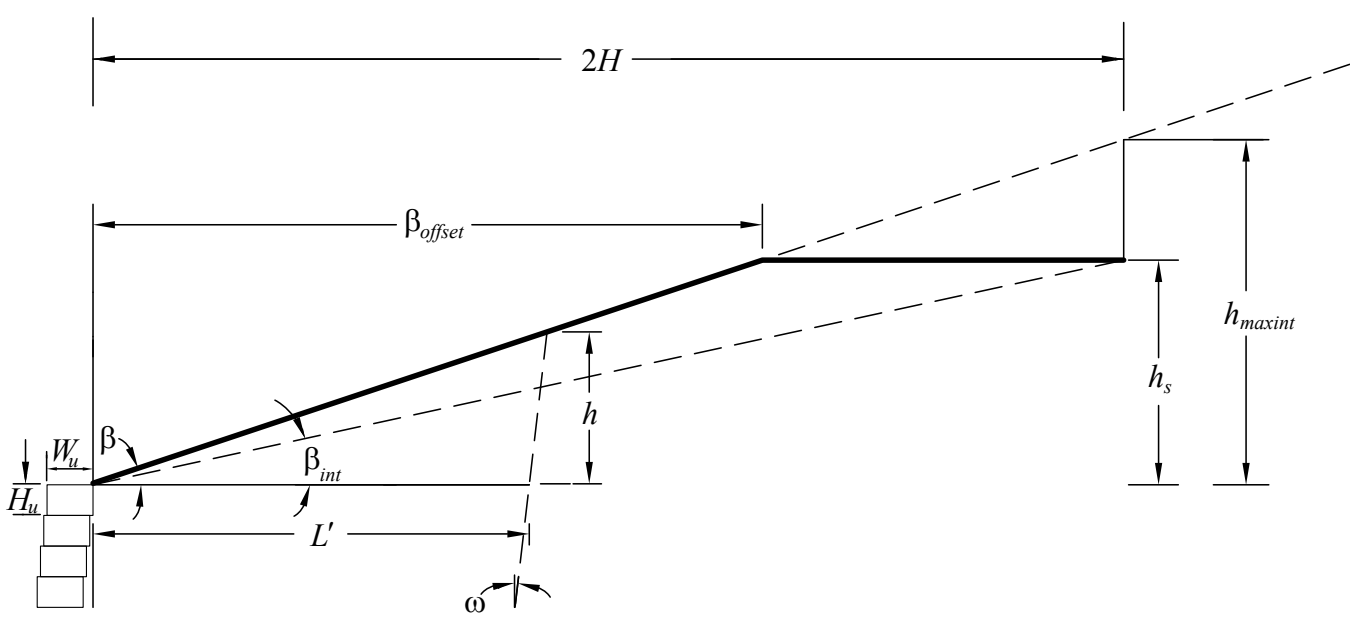

Figure 7-9: Broken Back Geometry—CASE A

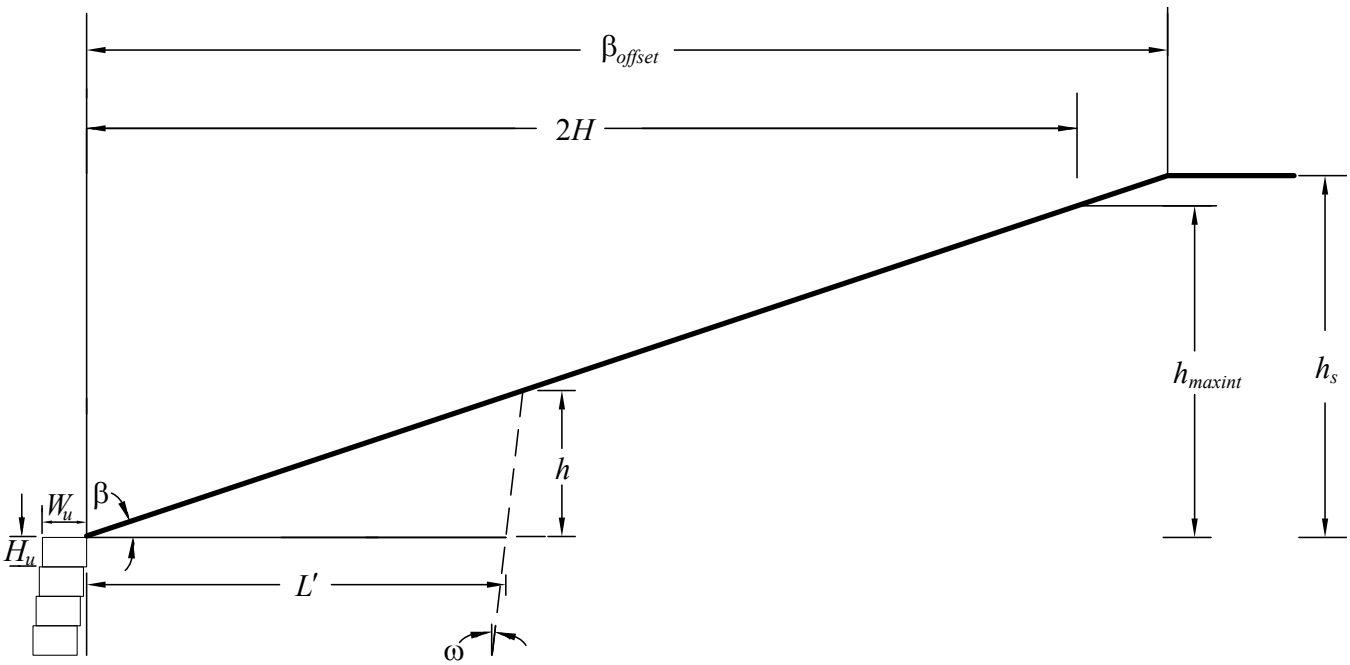

Figure 7-10: Broken Back Geometry—CASE B

estimate the effect of a broken slope on the internal pressures (see Figures 7-9 and 7-10). The maximum height of slope influence for internal analysis (h_{maxint}) and the slope used for internal analysis (β_{int}) are calculated as follows:

$$h_{maxint} = 2H \tan\beta \qquad \text{[Eq. 7-45]}$$

For Slope Case A: $h_s < h_{maxint}$ (broken slope crests within $2H$)

$$\beta_{int} = \arctan\frac{h_s}{2H} \qquad \text{[Eq. 7- 46A]}$$

For Slope Case B: $h_s \geq h_{maxint}$ (an infinite slope or broken slope that crests beyond $2H$)

$$\beta_{int} = \beta \qquad \text{[Eq. 7- 46B]}$$

7.5.1.2: Overall Internal Forces

The calculation of horizontal forces due to soil self-weight surcharge loadings is similar to external stability quantities using Equations 7-12 to 7-14. The main difference is that lateral earth forces are taken with respect to the height of the wall (H) rather than H_{ext} and only horizontal components of the loads are considered, as shown on Figure 7-11.

Hence, the internal earth force due to self-weight of reinforced (infill) soil acting over the whole height of the wall is:

$$P'_{sH} = 0.5K_{a\,\text{int}}\gamma_i(H)^2\cos(\delta_i - \omega) \qquad \text{[Eq. 7-47]}$$

The total internal earth force due to a uniformly distributed live load surcharge (q_l) and dead load surcharge (q_d) acting over the whole height of the wall is:

$$P'_{qH} = (q_l + q_d)K_{aint}H\cos(\delta_i - \omega) \qquad \text{[Eq. 7-48]}$$

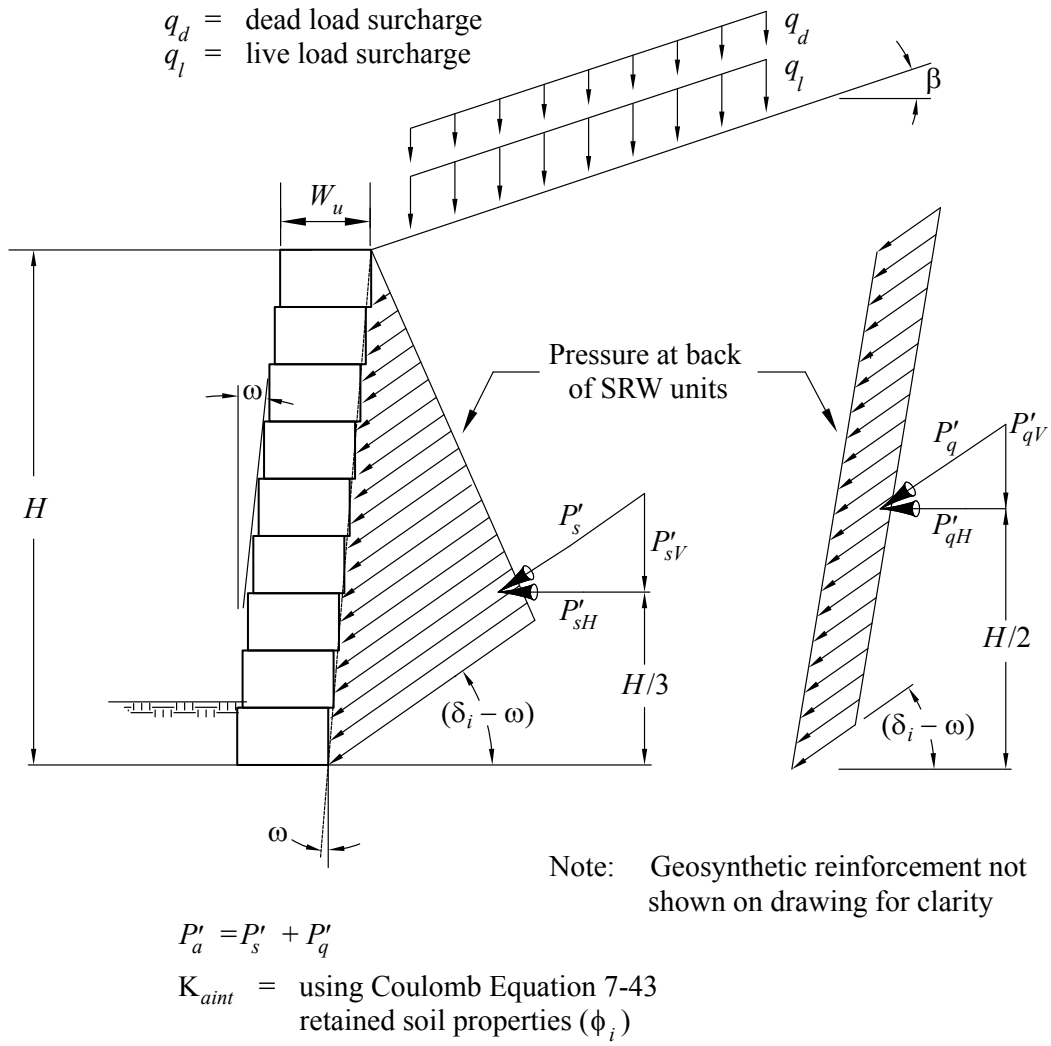

Figure 7-11: Internal Stability—Forces and Geometry

The total horizontal active earth force (P'_{aH}) acting at the back of the SRW unit is:

$$P'_{aH} = P'_{sH} + P'_{qH} \qquad \text{[Eq. 7-49]}$$

7.5.1.3: Internal Failure Plane

The location of peak internal tensile load and anchorage zone within the reinforced (infill) soil mass is referenced to a failure plane that is assumed to propagate up into the reinforced (infill) soil mass from the heel of the lowermost SRW unit at an angle α_i from the horizontal (Figure 7-6) determined as follows:

[Eq. 7-50]

$$\alpha_i = \arctan\left[\frac{-\tan(\phi_i - \beta_{int}) + \sqrt{[\tan(\phi_i - \beta_{int}) \times (\tan(\phi_i - \beta_{int}) + \cot(\phi_i + \omega)) \times (1 + \tan(\delta_i - \omega) \times \cot(\phi_i + \omega))]}}{1 + \tan(\delta_i - \omega) \times (\tan(\phi_i - \beta_{int}) + \cot(\phi_i + \omega))}\right] + \phi_i$$

7.5.2: Load on Individual Reinforcement Layers

The methodology uses the contributory area approach in which each layer of reinforcement is analyzed discreetly. The tensile load on any given reinforcement is calculated and compared to the allowable long-term strength of that particular reinforcement. First, an initial layout of the reinforcement vertical spacing must be established as a basis of calculating contributory areas for each geogrid layer.

7.5.2.1: Determination of Minimum Number of Geogrid Layers

Estimating the minimum number of reinforcement layers (N_{min}) required to satisfy horizontal equilibrium at the back of the dry-stacked column of SRW units is the initial design step. The value calculated using the following expressions should be rounded up to the nearest whole number.

For designs using a single reinforcement type:

$$N_{min} = \frac{P'_{aH} \times 1.5}{LTDS} \qquad \text{[Eq. 7-51]}$$

where:

$$P'_{aH} \times FS = LTDS_{(1)}N_1 + LTDS_{(2)}N_2 + ... + LTDS_{(n)}N_n \qquad \text{[Eq. 7-52]}$$

For multiple reinforcement types:

$$N_{min} = N_1 + N_2 + ... + N_t \qquad \text{[Eq. 7-53]}$$

The quantity P'_{aH} is the active earth force acting over the height of the wall (H) where the minimum factor of safety for overstress is typically 1.5 . The quantity $LTDS_{(t)}$ is the long-term design strength of reinforcement type t and N_t the total number of layers for that type t. Equation 7-52 allows any combination of design strengths (types t), but the common strategy is to use a single reinforcement type to facilitate construction. Alternatively, reinforcement materials that decrease in design strengths with increasing elevation above the bearing pad can be used to help keep vertical reinforcement layer spacings constant. N_{min} should always be rounded up to the nearest whole number of layers. Throughout this manual the subscript n indicates the reinforcement layer under consideration and N the total number of reinforcement layers to be analyzed.

The convention in this manual is to use $E_{(n)}$ to denote elevations in a vertical plane. The datum is the elevation of the heel of the lowermost SRW unit (i.e., top of leveling pad elevation); see Figure 7-12. The effect of battered wall and actual joint location is ignored to simplify analysis (the effect can be shown to be negligible).

The vertical location (elevation $E_{(n)}$) and number of reinforcement layers should be selected based on N_{min}, SRW unit height (H_u) and recognizing that earth pressures will increase linearly with depth. If a wall project comprises an alignment with variable footing grade, an effort is often made to preserve reinforcement elevations across wall sections to facilitate construction. If one or more reinforcement types are used, it is recommended that the stronger materials be placed at the lower elevations. The reinforcement layers, n, and types, t, should increase numerically from the base of the wall up. Vertical spacing should also not exceed the maximum spacing requirements discussed in Section 7.2.2

7.5.2.2: Contributory Area

The contributory area ($A_{c(n)}$) for any reinforcement elevation is defined as the midpoint between adjacent reinforcement elevations or the between the top and bottom of the wall. Hence, for the lowermost layer:

$A_{c(n)}$ = contributory area to determine force in reinforcement, $F_{g(n)}$
D_n = depth to midpoint of contributory area, $A_{c(n)}$
$F_{g(n)}$ = force in reinforcement at layer n
d_n = average depth of overburden over reinforcement anchorage length, $L_{a(n)}$
α_i = orientation of internal failure surface
E_n = elevation of layer n above reference datum
$L_{a(n)}$ = anchorage length of layer n
$AC_{(n)}$ = anchorage capacity of layer n
H = height
q_d = dead load surcharge
q_l = live load surcharge
σ_h = horizontal pressure
ω = wall inclination

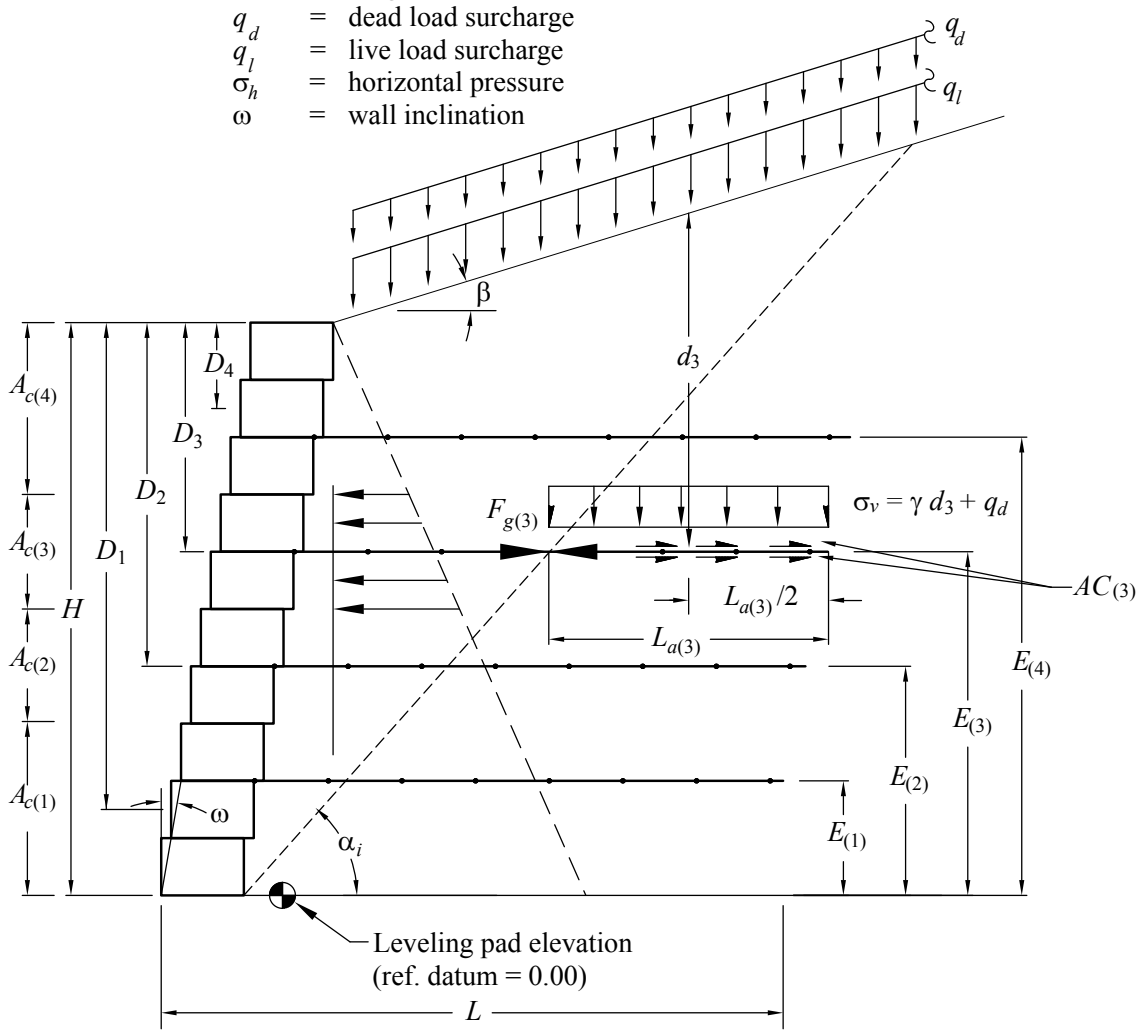

Note: $F_{g(1)}$, $F_{g(2)}$ and $F_{g(4)}$ are not shown for clarity of $F_{g(3)}$.

Figure 7-12: Internal Dimensions, Forces and Definitions

$$A_{c(1)} = (E_{(2)} + E_{(1)}) / 2 \qquad \text{[Eq. 7-54]}$$

For any intermediate layer n:

$$A_{c(n)} = \left(\frac{E_{(n+1)} + E_{(n)}}{2}\right) - \left(\frac{E_{(n)} + E_{(n-1)}}{2}\right) \qquad \text{[Eq. 7-55]}$$

which simplifies to:

$$A_{c(n)} = \left(\frac{E_{(n+1)} - E_{(n-1)}}{2} \right) \qquad \text{[Eq. 7-56]}$$

For the topmost layer N:

$$A_{c(N)} = H - [(E_{(N)} - E_{(N-1)}) / 2] \qquad \text{[Eq. 7-57]}$$

7.5.2.3: Midpoint of Contributory Area

To calculate the force in a geosynthetic reinforcement layer ($F_{g(n)}$), the depth D_n below the crest of the wall to the midpoint of the contributory area ($A_{c(n)}$) must be determined for that layer n to calculate the average pressure. Generally, for non-uniform vertical spacing, the midpoint of the contributory area will be different from the placement elevation $E_{(n)}$. The D_n to the midpoint of a contributory area ($A_{c(n)}$) can be calculated as follows for the lowermost layer.

$$D_1 = H - \left(\frac{A_{c(1)}}{2} \right) \qquad \text{[Eq. 7-58]}$$

For any intermediate layer n:

$$D_n = H - \left[A_{c(1)} + A_{c(2)} + \ldots + A_{c(n-1)} + \left(\frac{A_{c(n)}}{2} \right) \right] \qquad \text{[Eq. 7-59]}$$

For the uppermost layer N:

$$D_N = \frac{A_{c(N)}}{2} \qquad \text{[Eq. 7-60]}$$

7.5.2.4: Applied Tensile Load of Reinforcement Layers

The tensile load developed in a layer of geosynthetic reinforcement is based on the contributory area ($A_{c(n)}$) of the layer and the integration of lateral pressure over the effective height of the wall defined by the contributory area (Figure 7-12). The total applied tensile force in the geosynthetic reinforcement ($F_{g(n)}$) can be calculated using the average horizontal pressure at the midpoint of the contributory area as follows:

$$F_{g(n)} = [\gamma_i D_n + q_1 + q_d] K_{aint} A_{c(n)} \cos(\delta_i - \omega) \qquad \text{[Eq. 7-61]}$$

7.5.3: Tensile Overstress of Reinforcement Layers

The reinforcement layers must have sufficient tensile capacity to resist the applied tensile load ($F_{g(n)}$) for that given reinforcement layer. The load on the reinforcement layers increases with increasing depth and with the increasing contributory area of the layer (larger vertical spacing between layers).

The factor safety against overstress is calculated as follows:

$$FS_{to(n)} = \frac{LTDS_{(n)}}{F_{g(n)}} \qquad \text{[Eq. 7-62]}$$

The minimum factor of safety for overstress should typically be 1.5 (see Table 5-2). If the factor of safety is less than this minimum, either the applied tensile load ($F_{g(n)}$) on the geogrid should be reduced by reducing the contributory area for each geogrid (by adding layers and reducing vertical spacing between geogrid layers) or by using a geogrid with a higher long-term design strength (*LTDS*).

7.5.4: Pullout of Reinforcement

The applied tensile force ($F_{g(n)}$) in the geosynthetic reinforcement must be transferred to the soil through the development of an anchorage capacity beyond the active wedge of soil movement defined by a failure surface inclined to the horizontal at α_i (Figure 7-12). Pullout of reinforcement layers is prevented by sufficient anchorage capacity, which maintains a coherent mass of soil in the reinforced SRW. The ratio of the developed anchorage capacity ($AC_{(n)}$) to the applied force ($F_{g(n)}$) in any geosynthetic reinforcement layer is designated by the factor of safety against pullout FS_{po}. This represents a reasonable assessment of the geosynthetic material's potential to resist pullout from the soil. Routinely, the uppermost layer of reinforcement is most critical due to reduced overburden pressure and longer length needed at the top of the wall to extend beyond the internal failure plane.

7.5.4.1: Anchorage Capacity of Reinforcement

The anchorage capacity ($AC_{(n)}$) of geosynthetic reinforcement is related directly to the available soil shear strength through the coefficient of interaction for pullout parameter (C_i). The magnitude of anchorage capacity is controlled by the anchorage length ($L_{a(n)}$), which is the portion of length for a specific geosynthetic layer beyond the failure surface (α_i) (see Figure 7-12). The minimum anchorage length for structures is 1 ft (3 m). The anchorage capacity ($AC_{(n)}$) of the geosynthetic reinforcement proportional to the anchorage length ($L_{a(n)}$), peak shear strength of anchorage soil (tan ϕ_i), coefficient of interaction for pullout (C_i) and the depth of soil overburden (d_n) acting over the anchorage length.

The anchorage capacity ($AC_{(n)}$) is calculated as follows:

$$AC_{(n)} = 2L_{a(n)}C_i(d_{(n)}\gamma_i + q_d)\tan\phi_i \qquad \text{[Eq. 7-63]}$$

Only the dead load component of the uniform surcharge distribution enters the calculation above in order to be consistent with treatment of the dead and live surcharge loads described in Section 7.1.3. The coefficient 2 in the above equation is typical of many anchorage models and reflects resistance being mobilized on both the top and bottom of the geosynthetic layer and is consistent with the definition of C_i in Section 2.5.3.

The anchorage length ($L_{a(n)}$) for any geosynthetic layer within the reinforced zone can be calculated as follows:

$$L_{a(n)} = L - W_u - (E_{(n)}\tan(90 - \alpha_i)) + (E_{(n)}\tan\omega) \qquad \text{[Eq. 7-64]}$$

The available soil shear strength that can be transferred to the geosynthetic reinforcement to resist pullout is controlled by the normal overburden stress acting over the anchorage length ($L_{a(n)}$). The average normal overburden pressure is proportional to the average overburden depth (d_n) (i.e., at the midpoint of the anchorage length) that is calculated accordingly:

For Slope Case A : broken slope crests before mid-point of anchorage length

$$d_{(n)} = (H - E_n) + h_s \qquad \text{[Eq. 7-65A]}$$

For Slope Case B: infinite slope or broken slope crests beyond mid-point of anchorage length

$$d_{(n)} = (H - E_{(n)}) + \left[\left(\frac{E_{(n)}}{\tan(\alpha_i)}\right) - H\tan\omega + \frac{L_{a(n)}}{2}\right]\tan\beta \qquad \text{[Eq. 7- 65B]}$$

7.5.4.2: Pullout Factor of Safety

The factor of safety against reinforcement pullout should be greater than or equal to the minimum required for design (typically 1.5, see Table 5-2). If the factor of safety of any layer does not satisfy the specified design value, it can usually be increased in length or placed at a lower level to accommodate the design. There is no requirement in this manual for reinforcement layers to have uniform length, with the exception that each be equal to or greater than the minimum base width length (L) established from external stability calculations.

The Factor of Safety against pullout at the individual reinforcement layers is:

$$FS_{po(N)} = \frac{AC_{(n)}}{F_{g(n)}} \qquad \text{[Eq. 7-66]}$$

7.5.5: Internal Sliding Failure

The potential for an internal sliding failure to propagate along the surface of a reinforcement layer must be examined for each reinforcement elevation ($E_{(n)}$) (Figure 7-14). The potential for this type of failure mechanism increases as the shear resistance between the soil and reinforcement material decreases. The shear resistance available at a geosynthetic surface is described by parameter $R'_{s(n)}$, (Equation 7-75) in this manual and is proportional to the coefficient of direct sliding (C_{ds}) of the geosynthetic material. The test method to determine C_{ds} is described in Section 2.5.3.2. The maximum value of C_{ds} is 1.0. The failure plane generated along the surface of a geosynthetic layer will also have to propagate through the interface between SRW units. This interface will provide some additional shear capacity described by parameter $V_{u(n)}$.

The potential for an internal sliding failure should be examined for each reinforcement elevation. The driving force $P_{aH(n)}$ for the internal sliding failure is calculated in a manner similar to external sliding but over the external height of geogrid layer elevation to the top grade at the back of the reinforced zone, as shown in Equations 7-14 through 7-21, and Equation 7-29, substituting (H_{ext} - $E_{(n)}$) for (H_{ext}). The internal sliding forces can then be calculated as follows:

7.5.5.1: Internal Sliding Forces

<u>Horizontal Components</u>

The horizontal component of P_s is calculated as follows:

$$P_{sH(n)} = 0.5K_{aext}\gamma_r(H_{ext} - E_{(n)})^2\cos(\delta_e - \omega) \qquad \text{[Eq. 7-67]}$$

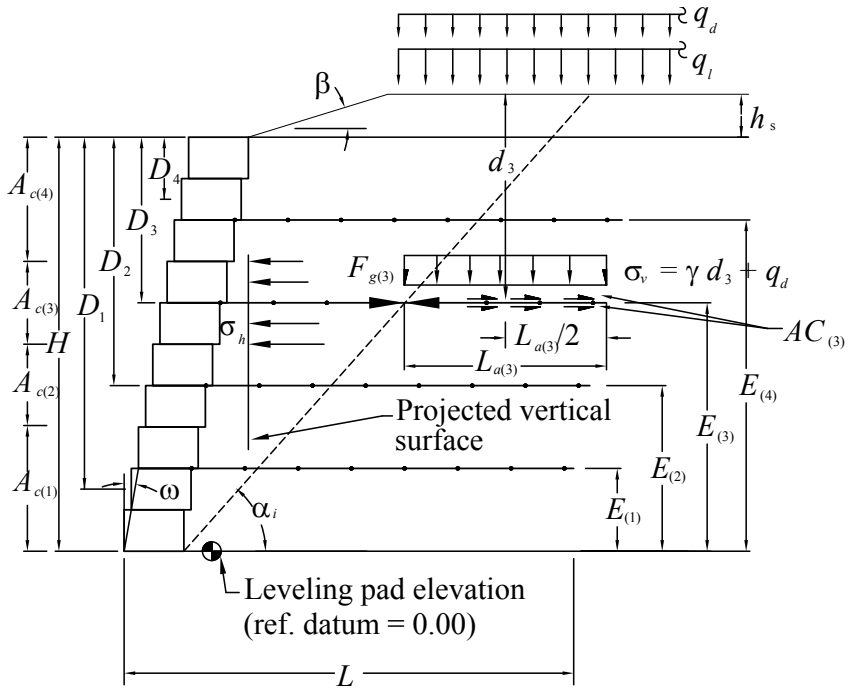

CASE A - Broken Slope Height (h_s) crests before midpoint of anchorage length

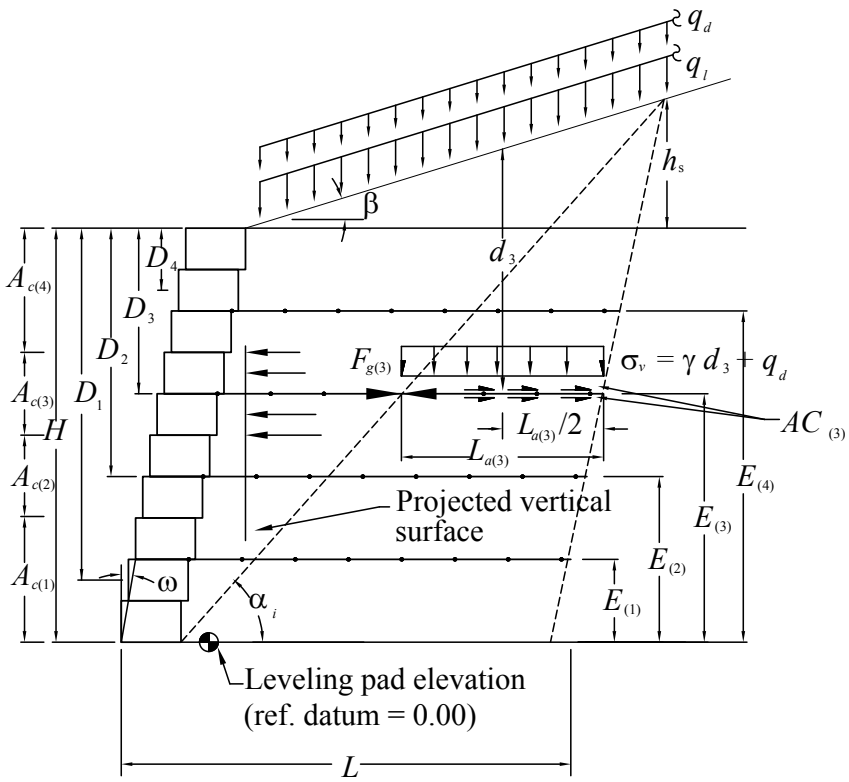

CASE B - Infinite Slope or Broken Slope Height (h_s) crests beyond midpoint of anchorage length

Figure 7-13: Definition of Overburden Depth

$P_{a(n)}$ = total active earth force generating sliding on geosynthetic n
$W'_{ri(n)}$ = weight of soil on geosynthetic n
$L_{\beta(n)}$ = length of reinforcement in internal sliding acted upon by backslope
$L'_{s(n)}$ = length of reinforcement used in internal stability analysis
L = length of reinforcement
α_e = orientation of external failure plane
$R'_{s(n)}$ = shear resistance along geosynthetic
$E_{(n)}$ = elevation of layer n above reference datum
$V_{u(n)}$ = shear capacity of SRW unit
q_l = live load uniform surcharges
q_d = dead load uniform surcharges
$W'_{r\beta(n)}$ = weigth of slope above the reinforced zone
H_{ext} = total height of soil at the back of the reinforced zone = $H+h$

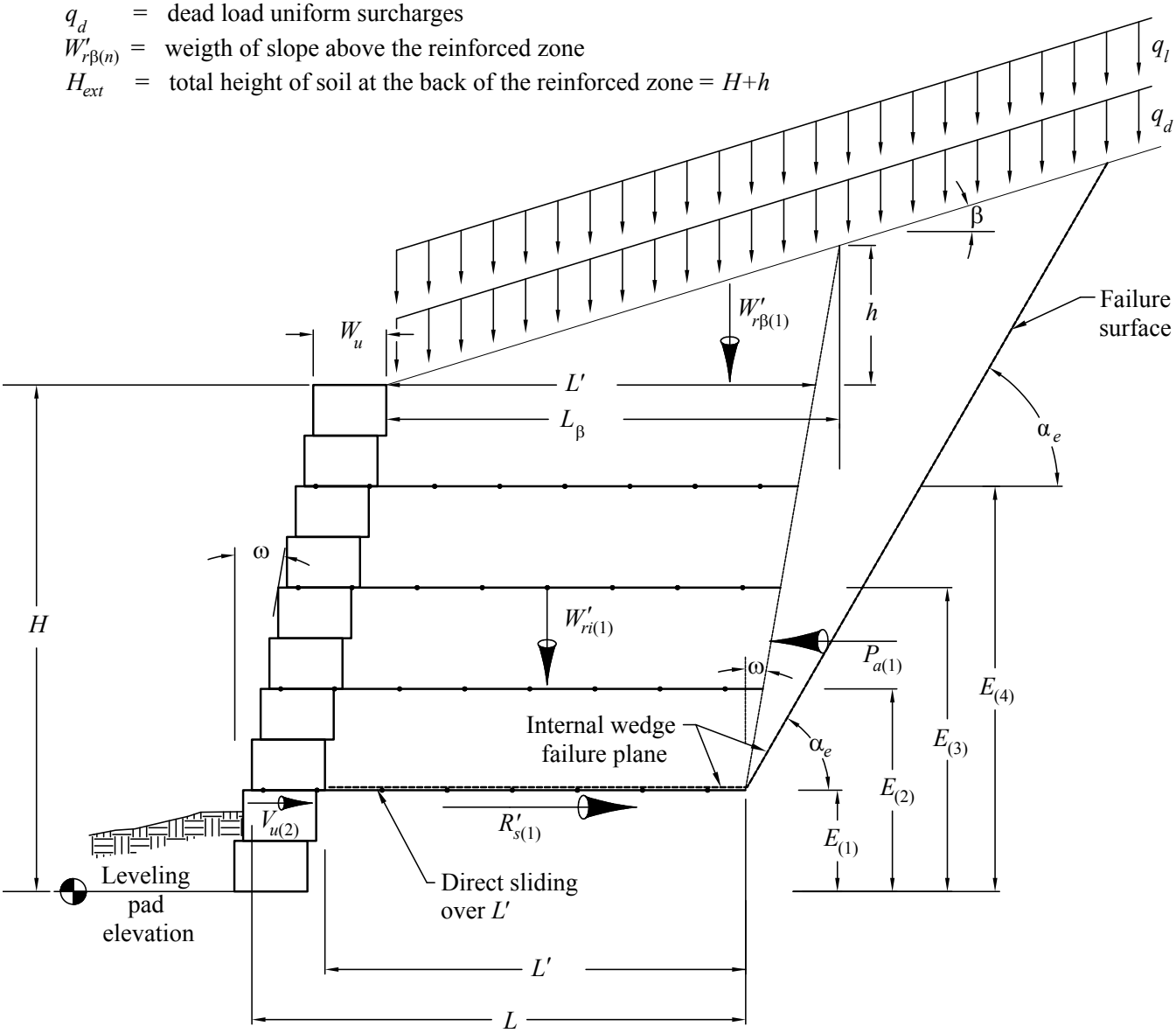

Figure 7-14: Internal Sliding Stability Analysis – Forces and Definitions – Infinite Slope Condition

The horizontal component of P_q, when acting as a driving force in stability calculation, is calculated as follows:

$$P_{qdH(n)} = q_d K_{aext}(H_{ext} - E_{(n)})\cos(\delta_e - \omega) \quad \text{[Eq. 7-68]}$$

$$P_{qlH(n)} = q_l K_{aext}(H_{ext} - E_{(n)})\cos(\delta_e - \omega) \quad \text{[Eq. 7-69]}$$

Vertical Components

The vertical component of P_s is calculated as follows:

$$P_{sV(n)} = 0.5 K_{aext}\gamma_r (H_{ext} - E_{(n)})^2 \sin(\delta_e - \omega) \quad \text{[Eq. 7-70]}$$

The vertical component of P_q, when acting as a driving force in stability calculation, is calculated as follows:

$$P_{qdV(n)} = q_d K_{aext}(H_{ext} - E_{(n)})\sin(\delta_e - \omega) \quad \text{[Eq. 7-71]}$$

$$P_{qlV(n)} = q_l K_{aext}(H_{ext} - E_{(n)})\sin(\delta_e - \omega) \quad \text{[Eq. 7-72]}$$

Finally,

$$P_{aH(n)} = P_{sH(n)} + P_{qdH(n)} + P_{qlH(n)} \quad \text{[Eq. 7-73]}$$

$$P_{aV(n)} = P_{sV(n)} + P_{qdV(n)} + P_{qlV(n)} \quad \text{[Eq. 7-74]}$$

7.5.5.2: Internal Sliding Resistance

Internal sliding resistance is due both the soil friction resistance along the geosynthetic layers considered and the shear resistance of the SRW unit facing interface at the layer analyzed.

The sliding resistance over the geosynthetic reinforcement $R'_{s(n)}$ is calculated as follows:

$$R'_{S(n)} = C_{ds}(q_d L_\beta + W'_{ri(n)} + W_{r\beta} + P_{sV(n)} + P_{qdV(n)})\tan\phi_i \quad \text{[Eq. 7-75]}$$

If the dead surcharge load is offset, the term L_β in the above equations may need to be replaced by the term $L_{\beta q}$ (Equation 7-29) or q_d may need to be removed entirely (Equation 7-28).

Also, in this equation, $W'_{ri(n)}$ is the weight of the soil from the elevation of the nth layer to the top of wall, at the face, and $W_{r\beta}$ is the weight of the soil in the slope above the top of reinforced zone. $P_{sV(n)}$ and $P_{qdV(n)}$ are the vertical components of the earth pressures occurring from elevation of the nth layer analyzed up to the top grade at the back of the reinforced zone. Note that $W_{r\beta}$ and L_β are the same for the external sliding calculations presented in Section 7.4.2.

The weight of soil ($W'_{ri(n)}$) acting on L' is calculated as follows using the geometry illustrated in Figure 7-14:

$$W'_{ri(n)} = L' \times (H - E_{(n)}) \times \gamma_i \quad \text{[Eq. 7-76]}$$

The length of geosynthetic reinforcement (L') over which sliding can occur has been discussed in Section 7.4.1 for External Stability analysis. The length of the reinforcement does not change in the Internal Sliding analysis.

The weight $W_{r\beta}$ remains the same as calculated from Section 7.4.1.3, Equation 7-31.

The shear capacity ($V_{u(n)}$) at the interface between SRW units, which will resist the internal sliding failure, can be calculated by using Equation 6-30 from Section 6. The shear capacity will be controlled by the weight of SRW units ($W_{w(n)}$) (Eq. 6-20) acting on the interface and can be determined using:

$$V_{u(n)} = a_u + W_{W(n)} \tan \lambda_u \qquad \text{[Eq. 7-77]}$$

7.5.5.3: Factor of Safety Internal Sliding at Each Reinforcement Layer

The factor of safety of internal sliding is calculated as follows:

$$FS_{sl(n)} = \frac{R'_{s(n)} + V_{u(n)}}{P_{aH(n)}} \qquad \text{[Eq. 7-78]}$$

The $FS_{sl(n)}$ at each geosynthetic reinforcement level should be greater than or equal to that required (typically 1.5, see Table 5-2). For substandard $FS_{sl(n)}$, the overall length of geosynthetic reinforcement (L) must be increased for the layer analyzed and all reinforcement layers above it. Alternatively, the reinforcement placement elevations may be altered to reduce the sliding force ($P_{aH(n)}$) and/or increase the length L' over which sliding occurs .

Section 7.6: Local Stability of SRW Units

The unique dry-stacked construction method using SRW units and their connection to geosynthetic reinforcement layers requires that stability analyses be carried out to ensure the column of SRW units remains intact and does not bulge excessively. The following local stability analyses limit the vertical spacing of geosynthetic reinforcement:

- **Facing Connection:** The design strength of the facing connection between SRW units and the geosynthetic reinforcement must not be exceeded to ensure integrity of the composite system.
- **Crest Toppling:** The unreinforced height of SRW units at the top of the structure must not lead to toppling (overturning) or sliding of the units near the crest of the wall. The analyses performed are the same as overturning and internal stability for conventional SRWs, as covered in Sections 6.4.4 and 6.5.

Visual identification of the structural performance of this composite system of SRW units, soil and geosynthetic reinforcement is largely determined by the local stability of SRW units and influenced by construction procedures (Section 6). Local stability is the interaction with, and connection of, SRW units to geosynthetic reinforcement as it relates to the two main failure modes shown above. Local stability is controlled by the specific engineering performance properties of SRW units.

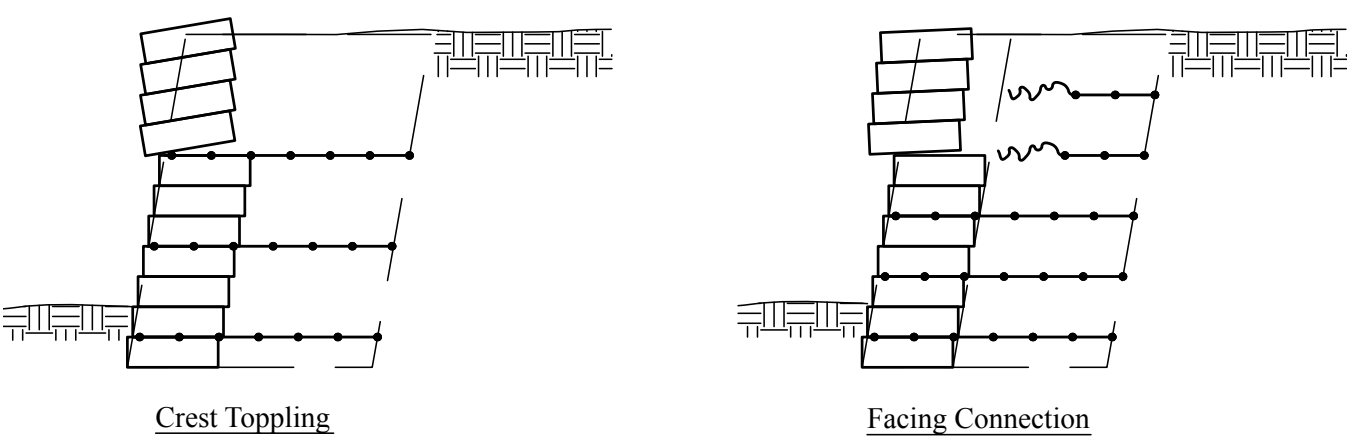

Figure 7-15: Main Modes of Failure for Facing Stability

There must be sufficient connection strength and stiffness between the SRW unit and geosynthetic reinforcement such that the geosynthetic reinforcement does not rupture or pull through the SRW units. Additionally, the geosynthetic reinforcement placement elevations should be vertically spaced so the applied lateral forces are safely below the shear capacity of the SRW units. If the shear capacity between SRW units is exceeded, undesirable localized bulging of the SRW may result.

The SRW units near the top of the wall must be examined to ensure they are stable as a free standing retaining wall above the highest reinforcement placement elevation. The examination of the upper unreinforced SRW height for sliding and overturning failure modes is performed in the same manner as the gravity SRW analysis (Sections 6.4.3 and 6.4.4).

For facial stability analysis only, if a surcharge is offset a sufficient distance behind the back of the units, the destabilizing forces due to the surcharge can be removed from the driving force equations for the facing elements that are above the setback surcharge. The calculation of an influence elevation of an offset surcharge and associated changes in driving force equation are further explained in Section 7.6.3.

7.6.1: Facing Connection Strength

The interface between the geosynthetic reinforcement and SRW unit at each reinforcement placement elevation ($E_{(n)}$) must have sufficient connection strength to preclude rupture or slippage of the reinforcement due to the applied tensile force ($F_{g(n)}$). The full tensile load ($F_{g(n)}$) on a reinforcement layer typically occurs at the intersection of the failure plane with the geosynthetic, recognizing that much of this load may be shed before reaching the facing. However, as a conservative simplification, in this manual the tensile load is considered to be fully exerted at the facing connection and the influence of the vertical component of the earth pressures is ignored.

The ultimate strength of the connection is evaluated using the limit state connection strength model as determined below.

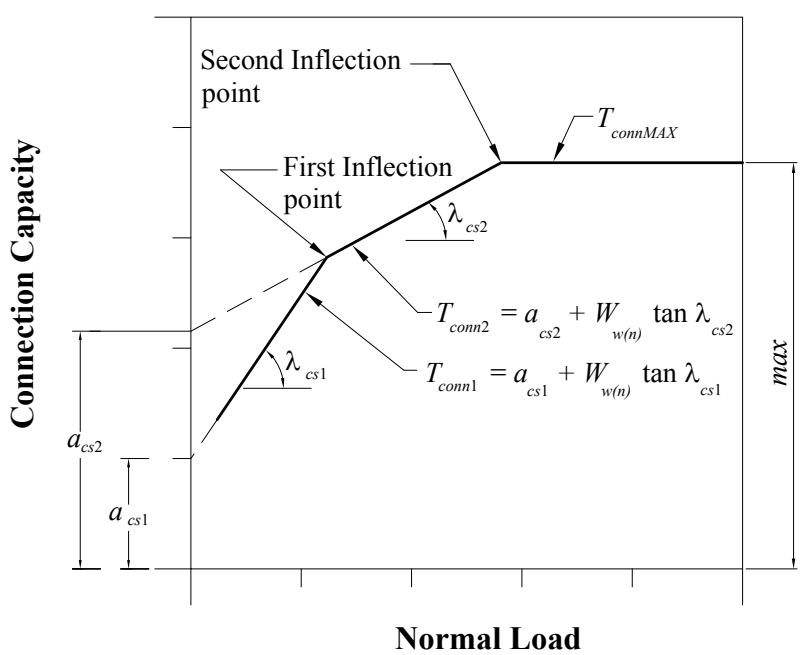

Figure 7-16: Connection Capacity vs. Long-Term Design Strength for a Given Reinforcement

The connection strength (T_{conn}) relationship between any specific combination of geosynthetic reinforcement and height of SRW units can be determined through laboratory testing as defined in Section 2.1.3.1 and Appendix C. Laboratory testing is required to establish the design facing connection strength relationship parameters, a_{cs} and λ_{cs}, to relate connection strength T_{conn} and applied normal load.

The connection strength can be influenced by the weight of SRW units $W_{w(n)}$ (Equation 6 -18 modified for the height of this column of SRW units) acting on the interface (H - $E_{(n)}$). The connection strength ($T_{conn\,(n)}$) at each geosynthetic reinforcement placement elevation ($E_{(n)}$) can be calculated as:

$$T_{conn(n)} = a_{cs} + W_{W(n)} \tan \lambda_{cs} \qquad \text{[Eq. 7-79]}$$

where a_{cs} and λ_{cs} will be a_{cs1}, λ_{cs1} or a_{cs2}, λ_{cs2} depending on the normal load ($W_{W(n)}$) and $T_{conn(n)}$ cannot exceed $T_{connMAX}$.

The connection must be able to resist the tensile force that is transferred from the reinforced soil mass to the connection of a SRW system ($F_{g(n)}$) which is a function of the vertical spacing of the reinforcement and proximity of the internal failure surface to the connection.

The SRWall Version 4.0 allows for a bi-linear (in addition to the $T_{connMAX}$) definition of the connection capacity. In the software, the connection capacity is determined by means of inflection points as shown in Figure 7.16.

$$FS_{cs(n)} = \frac{T_{conn(n)}}{F_{g(n)}} \qquad \text{[Eq. 7-80]}$$

The calculated *FS* must be greater than or equal to the recommended minimum, which in this case is 1.5.

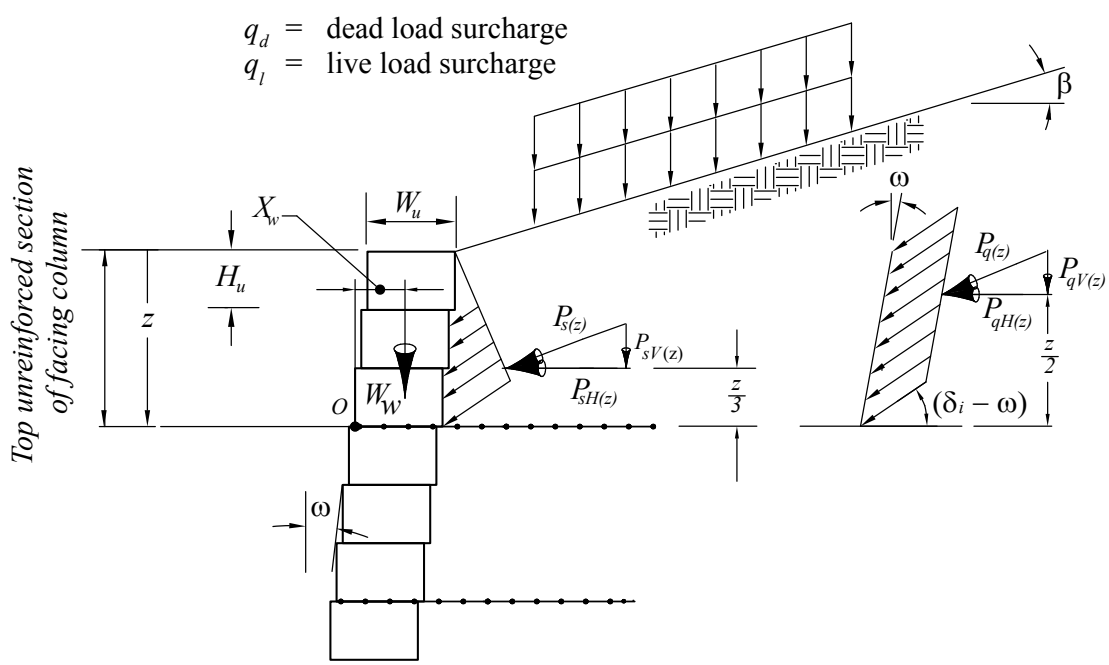

Figure 7-17: Geometry and Forces used to Calculate Crest Toppling

7.6.2: Crest Toppling

The SRW units above the highest reinforcement placement elevation must be examined to ensure that they will perform as a free standing retaining wall. The examination of the upper unreinforced SRW height for sliding (shear) and overturning failure modes is done in the same manner as the conventional SRW analysis, Sections 6.4.3 and 6.4.4 respectively, using the minimum safety factors established for critical structures in Table 5-2.

The earth pressures and resisting forces calculated in Section 6.4.1.2 for conventional overturning are modified as follows for crest toppling analysis. Rather than one single height, a series of heights at each unit interface elevation ($z_{(u)}$) is analyzed for overturning stability, where $\underline{u}$ indicates the unit interface under consideration starting at the unit interface at top layer of geogrid up until the top unit interface is reached. Therefore, similar to the Equations 6-6 to 6-12:

$$P_{s(z)} = 0.5\, K_{aint}\, \gamma_i\, z^2 \qquad \text{[Eq. 7-81]}$$

$$P_{q(z)} = (q_1 + q_d)\, K_{aint}\, z \qquad \text{[Eq. 7-82]}$$

$$P_{sH(z)} = 0.5 K_{aint}\, \gamma_i\, z^2 \cos(\delta_i - \omega) \qquad \text{[Eq. 7-83]}$$

$$P_{qH(z)} = (q_1 + q_d)\, K_{aint}\, z \cos(\delta_i - \omega) \qquad \text{[Eq. 7-84]}$$

and similarly, Equations 6-14 to 6-16, become:

$$P_{sV(z)} = 0.5 K_{aint}\, \gamma_i\, z^2 \sin(\delta_i - \omega) \qquad \text{[Eq. 7-85]}$$

$$P_{qdV(z)} = q_d\, K_{aint}\, z \sin(\delta_i - \omega) \qquad \text{[Eq. 7-86]}$$

$$P_{qlV(z)} = q_l\, K_{aint}\, z \sin(\delta_i - \omega) \qquad \text{[Eq. 7-87]}$$

Finally, the Factor of Safety for crest toppling can be calculated as follows:

$$FS_{ct(z)} = M_{r(z)} / M_{o(z)} \qquad \text{[Eq. 7-88]}$$

where:

$$M_{r(z)} = W_w X_w + P_{sV(z)} (W_u + (z/3) \tan \omega) + P_{qdV(z)} (W_u + 0.5\, z \tan \omega) \qquad \text{[Eq. 7-89]}$$

$$X_W = G_u + 0.5\, z \tan \omega - 0.5\, \Delta_U \qquad \text{[Eq. 7-90]}$$

and,

$$M_{o(z)} = P_{sH(z)} (z/3) + P_{qH(z)} (z/2) \qquad \text{[Eq. 7-91]}$$

The driving forces of surcharges for reinforced wall crest toppling calculations have the same exception for offset surcharges as connection strength calculations. The driving forces of an offset surcharge may be removed in the calculation at particular unit interface, if that interface elevation (z) is above the influence elevation E_{qdinfl} or E_{qlinfl} of the offset dead or live surcharge respectively, as explained in Section 7.6.3.

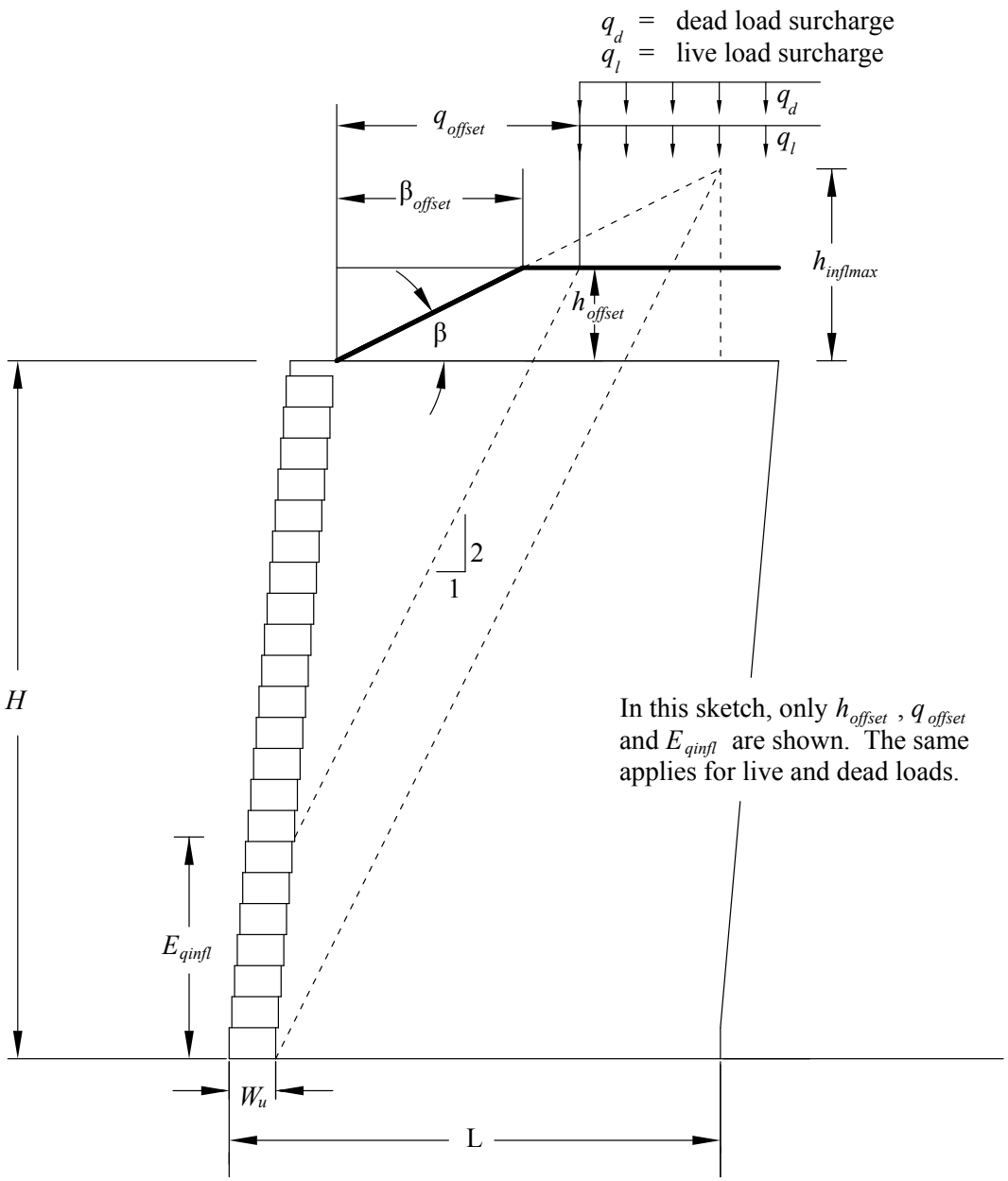

Figure 7-18: Elevation of Influence of Offset Surcharge at Back of Units

The reinforced SRW design is complete when the $FS_{ct(z)}$ for the intended maximum unreinforced height is greater than or equal to the minimum required safety factors (Table 5-2). Otherwise, if an unacceptable $FS_{ct(z)}$ is identified, the maximum unreinforced height should be reduced by incorporating an additional layer of reinforcement near the top of the wall or adjusting the vertical spacing of the existing reinforcement layout.

7.6.3: Offset Surcharge Load Reduction in Facial Calculations

For a reinforced wall, the influence of a surcharge in the facial stability calculations is considered to extend out and down at an angle equivalent to 1H:2V from the beginning of the surcharge behind the wall face (Figure 7-18). The horizontal offset distance behind the back of the top unit for either the dead $q_{doffset}$ or live $q_{loffset}$ load is given. The elevation where the line of influence of the offset surcharge intersects the back of the SRW units (E_{qinfl}) varies depending on the top-of-wall geometry and where the surcharge begins.

The elevation where the line of influence of the offset surcharge intersects the back of the SRW units (E_{qdinfl} or E_{qlinfl}) is calculated using the horizontal distance $q_{doffset}$ or $q_{loffset}$ and height above the top of wall where the offset surcharge begins. Because of the restriction in this manual that an offset of a surcharge is only accounted for on level grades, the start of a setback surcharge must be on the level portion of a broken slope or on a level top of wall grade.

From this, define the maximum height of a surcharge at its offset ($h_{inflmax}$) as,

$$h_{inflmax} = \frac{2\left(\frac{H}{2}\tan\beta - H\tan\omega\tan\beta\right)}{2-\tan\beta} \qquad \text{[Eq. 7-92]}$$

which reduces to 0 for a level grade. If the slope breaks beyond the internal influence zone behind the wall, it is considered a continuous infinite slope and any offset of the surcharge is ignored for purposes of facial calculations. Such a surcharge is treated as a uniform surcharge starting at the back of the top wall unit and covering the entire slope.

$$E_{qlinfl} = H - \frac{2q_{loffset} - h_{loffset}}{1-2\tan\omega} \qquad \text{[Eq. 7-93]}$$

$$E_{qdinfl} = H - \frac{2q_{doffset} - h_{doffset}}{1-2\tan\omega} \qquad \text{[Eq. 7-94]}$$

where:

Slope Case A: $h_{doffset}$ and/or $h_{loffset} < h_{inflmax}$, (broken slope crests within the zone of influence): $q_{doffset}$ and $q_{loffset}$ are located within the zone of influence and are considered in the calculations;

Slope Case B: $h_{doffset}$ and/or $h_{loffset} \geq h_{inflmax}$, (broken slope crests beyond the zone of influence or infinite slope): $h_{doffset}$ and/or $h_{loffset} = 0$, $q_{doffset}$ and/or $q_{loffset} = 0$ (any actual offset is ignored)

Level Grade:

When $\beta = 0$, Equation 7-93 or Equation 7-94 can be used with $h_{doffset}$ and $h_{loffset} = 0$.

Once the elevation at which the influence of the offset surcharge intersects with the back of the wall units is determined (E_{qlinf} and E_{qdinf}), the presence or absence of the surcharge force(s) on each facial elevation analyzed for connection strength and crest toppling can be determined as follows:

For Connection Strength:

If the elevation of the connection being evaluated is:

$$E_{(n)} \geq E_{qdinfl} \text{ or } E_{(n)} \geq E_{qlinfl} \qquad \text{[Eq. 7-95]}$$

then Equation 7-61

$$F_{g(n)} = [\gamma_i D_n + q_1 + q_d]K_{aint}A_{c(n)}\cos(\delta_i - \omega)$$

can be modified by setting q_d or $q_l = 0$ in this equation, respectively, at a given reinforcement elevation for connection strength calculations only.

For Crest Toppling:

If the elevation of the connection being evaluated is:

$$z \geq E_{qdinfl} \text{ or } z \geq E_{qlinfl} \qquad \text{[Eq. 7-96]}$$

then for the driving force earth pressure due to surcharge can be modified by setting q_d or $q_l = 0$ in the appropriate equations, respectively.

Section 7.7: Example Calculations

An example calculation using this design methodology to analyze a typical design problem for a generic reinforced soil SRW is presented in Appendix B. The example calculation serves to illustrate many of the consequences of certain design property assumptions and important intermediate calculation steps.

SECTION 8
INTERNAL COMPOUND STABILITY

As the name implies, Internal Compound Stability (ICS) affects the internal components of the retaining wall system, including the facing elements, and its components. Because ICS is influenced by loading conditions outside the reinforced fill area, it is referred to as a compound analysis. It should be clear that ICS analysis is not a substitute for Global Stability analysis. For all intents and purposes, it is a special case of the broader, more generalized Global Stability analysis.

ICS analysis is the evaluation of failure surfaces that originate in a given range behind a soil-reinforced SRW, exiting at the face of the wall. The distance is the greater of twice the height of the wall ($2H$) or, the height of the projection from the tail of the reinforcement layers to the surface (H_{ext}) plus a distance equal to the length of the reinforcement (L).

Examples of potential circular failure surfaces are indicated in Figure 8-1. Except for the surfaces described by *A, F* and G in this figure, the remaining will be considered in the ICS analysis. These surfaces describe failure planes

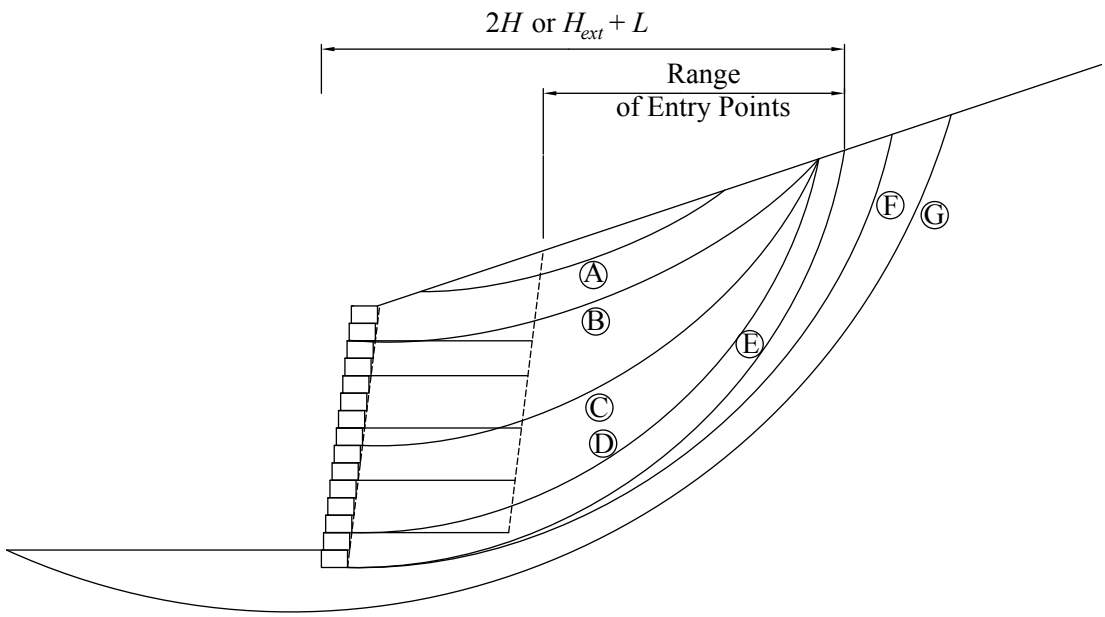

Ⓐ Surficial Stability: This mode of failure is not considered in the ICS analysis.

Ⓑ Ⓒ Ⓓ Internal Compound Stability: For a given pair of entry points and exit points (block/block interface only), a series of circular failure surfaces are generated and analyzed. Included in the analysis is the contribution of (when applicable) :
- Block/Block Shear Capacity
- Block/Reinforcement/Block Shear Capacity
- Connection Capacity
- Reinforcement Tensile Capacity
- Reinforcement Pullout Capacity
- Leveling Pad sliding resistance

Ⓔ Internal Compound Stability (Bottom Block): Only circular failure surfaces tangent to the base of the bottom block will be analyzed.

Ⓕ Outside entry point limits: This mode of failure is not considered in the ICS analysis.

Ⓖ Global Stability: This mode of failure is not considered in the ICS analysis.

Figure 8-1: Scope of Internal Compound Stability (ICS) Analysis

that are outside the scope of this design manual. The surface described by *A* is considered to be a surficial stability concern and should be identified by the geotechnical engineer. The surface described by *F* includes the contribution of the foundation soil which, although important, is not part of this analysis. The surface defined by G is a global stability consideration outside the scope of ICS. The remaining surfaces, which fall directly within the retaining wall structure, will be considered in the analysis.

For given soil parameters, the soil-reinforced SRW's resistance to ICS failures is a function of reinforcement length, long-term design strength, vertical spacing, as well as the relative stiffness of the facing elements.

Section 8.1: Model

Figure 8-2 illustrates the model on which ICS is based. Entry points are established at the crest of the wall as shown on the Figure 8-2. From the projection of the reinforcement at the crest of the wall to a distance of the greater of ($2H$) or ($H_{ext} + L$), equidistant points are established and will serve as the entry points of the failure surface. The exit points coincide with the back of the blocks.

For every pair of entry points and exit points, a number of circular failure surfaces are generated and analyzed. For every circular failure surface generated, the soil mass is divided into slices as shown in Figure 8-3.

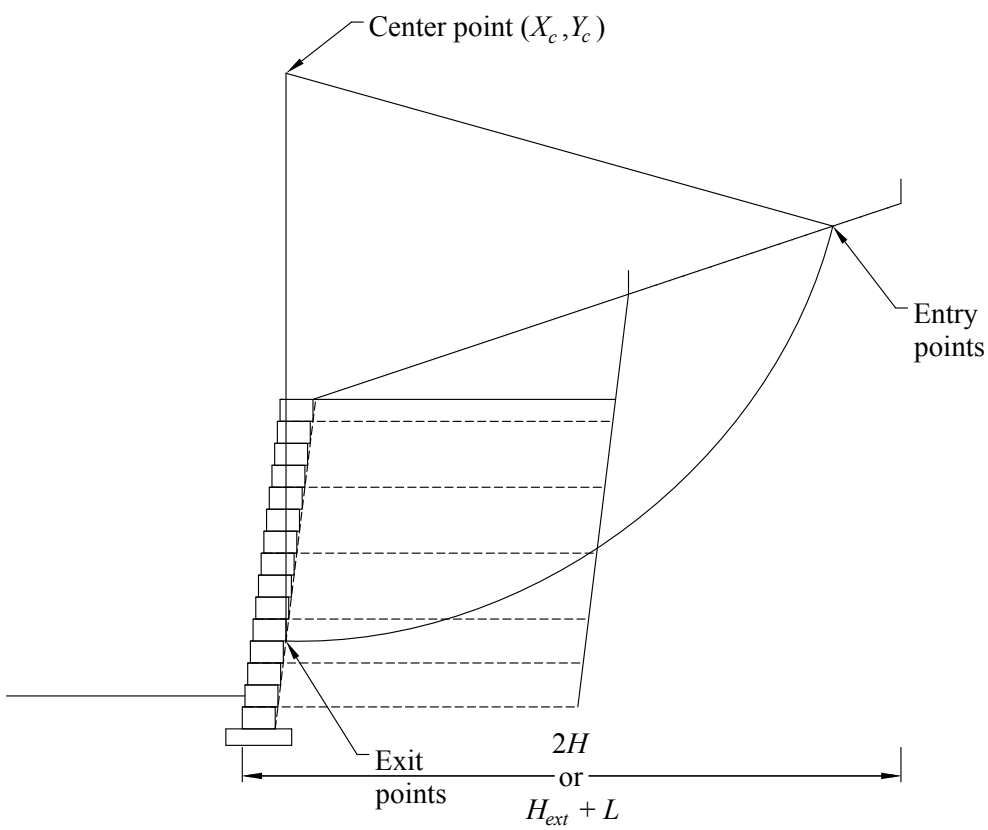

Figure 8-2: ICS Model

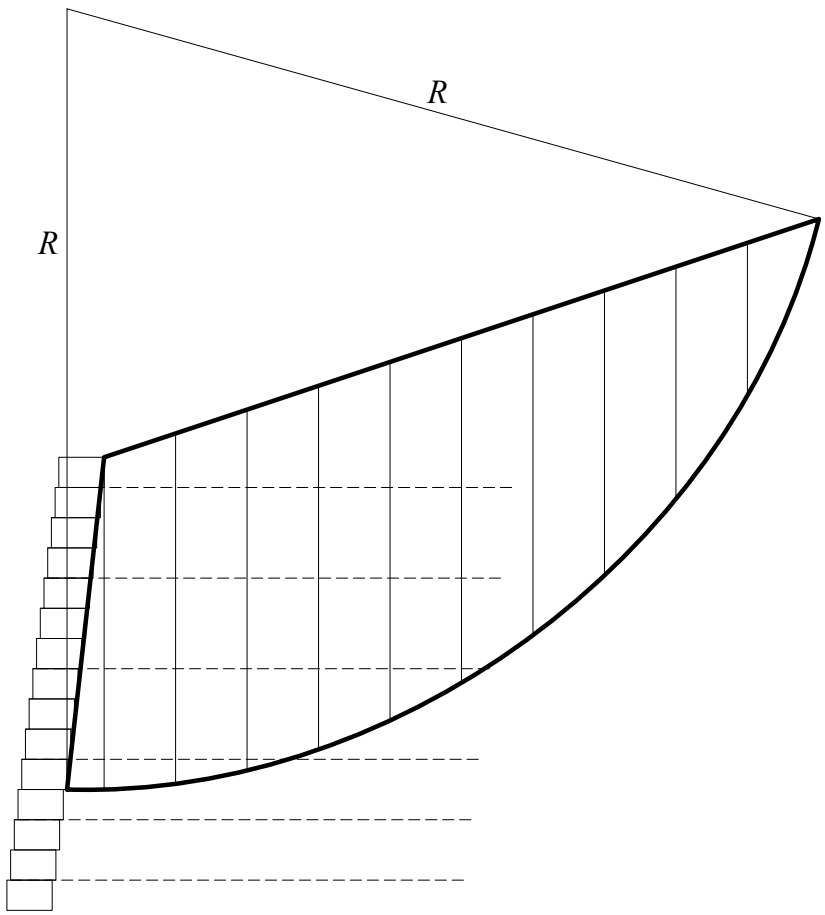

Figure 8-3: Potential Failure Surface

Section 8.2: Unreinforced Section

Each slice is then analyzed using the Simplified Bishop procedure, which assumes that the forces on the sides of the slices are horizontal (i.e., no shear stresses between slices). This is represented in Figure 8-4.

The equation for the equilibrium of moments about the center of the circle (including forces due to weight (W), external load (P) and shear strength of the soil only) as well as a pseudo-static term due to horizontal seismic load located at the center of each slice, can be written as follows:

$$R\sum\frac{(W+P)\tan\phi}{FS} - R\sum(W+P)\sin\alpha = 0 \qquad \text{[Eq. 8-1]}$$

Rearranging the terms and solving for FS, the equation becomes:

$$FS = \frac{\sum\frac{(W+P)\tan\phi}{m_\alpha}}{\sum(W+P)\sin\alpha} \qquad \text{[Eq. 8-2]}$$

where

$$m_\alpha = \cos\alpha + \frac{\sin\alpha\tan\phi}{FS} \qquad \text{[Eq. 8-3]}$$

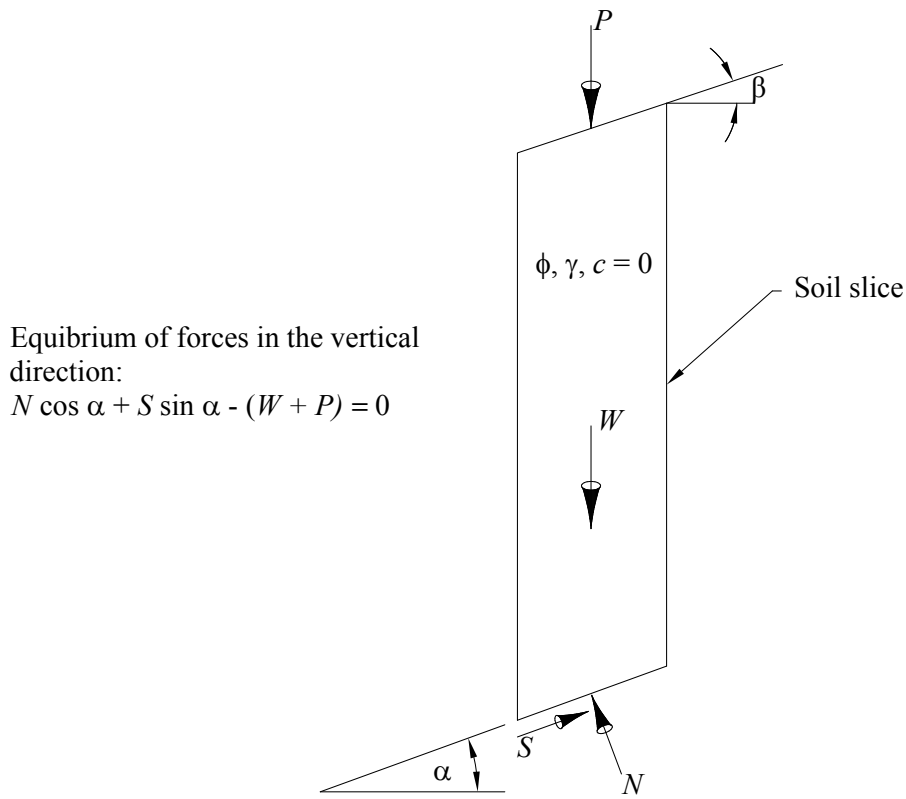

Figure 8-4: Soil Slice

Note that the term *FS* appears on both sides of the equation. This means that the calculation process is iterative. The most accurate result is when the *FS* on both sides of the equation converge.

At this point, no distinction has been made between live loads and dead loads as they apply to the ICS analysis. It is common practice to neglect the effects of the live loads in the resisting component (numerator in Equation 8-2). It is however, conservatively included in the driving component (denominator in Equation 8-2). On the other hand, dead loads are applied to both the resisting and driving components.

Equation 8-2 is used to define the Factor of Safety of an unreinforced section based on the Simplified Bishop procedure, in which the following assumptions are made:

- Circular slip surface;
- Horizontal forces between slices (i.e., no shear stresses between slices);
- Moment equilibrium about the center of the circle is satisfied, and;
- Force equilibrium in the vertical direction for each slice is satisfied.

Section 8.3: Reinforced Section

Additional forces can be applied to the soil slice such as reinforcement forces (*T*) as shown in Figure 8-5, as well as forces from the contribution of the facing (not shown). In this manual, these additional forces will be treated in a fashion similar to the way AASHTO [Ref. 36] and Duncan and Wright [Ref. 66] treats reinforcement in a reinforced section. The contribution of the facing will be treated as a reinforcement force.

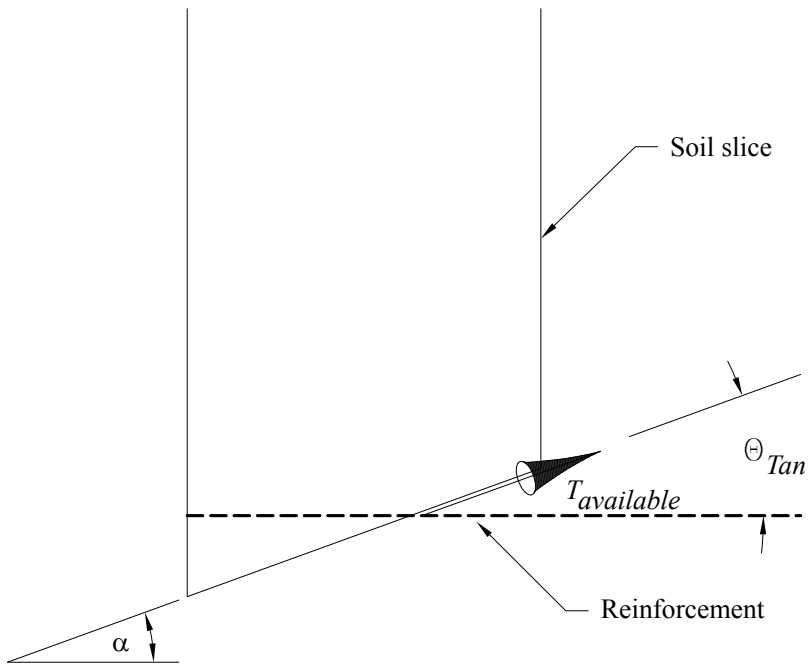

Figure 8-5: Soil Slice with Reinforcement Contribution

Therefore, the modified Bishop's Factor of Safety can be defined as follows:

$$FS_{(reinforced)} = FS_{(unreinforced)} + \frac{MR_{(reinforcement)} + MR_{(facing)}}{M_{DRIVING}} \qquad \text{[Eq. 8-4]}$$

where,

$FS_{(unreinforced)}$ = is defined by Equation 8-2
$MR_{(reinforcement)}$ = resisting moment generated by the reinforcement force(s) intersecting the failure plane
$MR_{(facing)}$ = resisting moment generated by the forces at the face of the wall
$M_{DRIVING}$ = $\sum (W + P)\sin(\alpha)$

Section 8.4: Contribution of the Reinforcement

When a potential slip circle intercepts one or more reinforcement layers, the contribution of the reinforcement(s) layer(s) is considered in the ICS process as a moment only. In this manual, it is assumed that the reinforcement force is fully mobilized (i.e., the reinforcement is permitted to rotate to the angle (α), the angle of the failure plane for the particular soil slice). Based on these assumptions, the following formula can be written for the resisting moment due to the reinforcement force(s):

$$MR_{(reinforcement)} = \sum (T_{available} R \cos\alpha) \qquad \text{[Eq. 8-5]}$$

where,

$T_{available}$ = available reinforcement force at the location of the intersection of the failure plane.

Depending on the location of the intersection of the reinforcement layer and the slip circle, $T_{available}$ is the lesser of the Long Term Design Strength (*LTDS*) of the reinforcement and the pullout capacity of the reinforcement. Note that the summation $\sum (T_{available} R \cos\alpha)$ applies only to the slices where the reinforcement intersects the slip surface.

Section 8.5: Contribution of the Facing

By definition, the ICS analysis requires that all potential failure surfaces exit at some point within the retaining wall structure. Therefore, every potential failure surface will exit at one of the following locations:

- At the base course where the bottom block rests on the leveling pad,
- At a block/block interface, or
- At a block/reinforcement/block interface.

Depending on the location of the exit point of the failure surface, the equation for the resisting moment due to the facing will take on the following form:

$$MR_{(facing)} = F_{available} R \qquad \text{[Eq. 8-6]}$$

For the case where the failure surface intersects the bottom course and the leveling pad (Case 1 in Figure 8-6):

$$F_{available} = \mu N \tan \phi_d \qquad \text{[Eq. 8-7]}$$

where,

μ = friction coefficient
N = normal load
ϕ_d = friction angle of leveling pad material

The 32 in. (813 mm) spacing on which the connection capacity is distributed (see Figure 8-6) is based on the recommendation that reinforcement spacing be no greater than 24 in. (610 mm). For the cases shown, the block

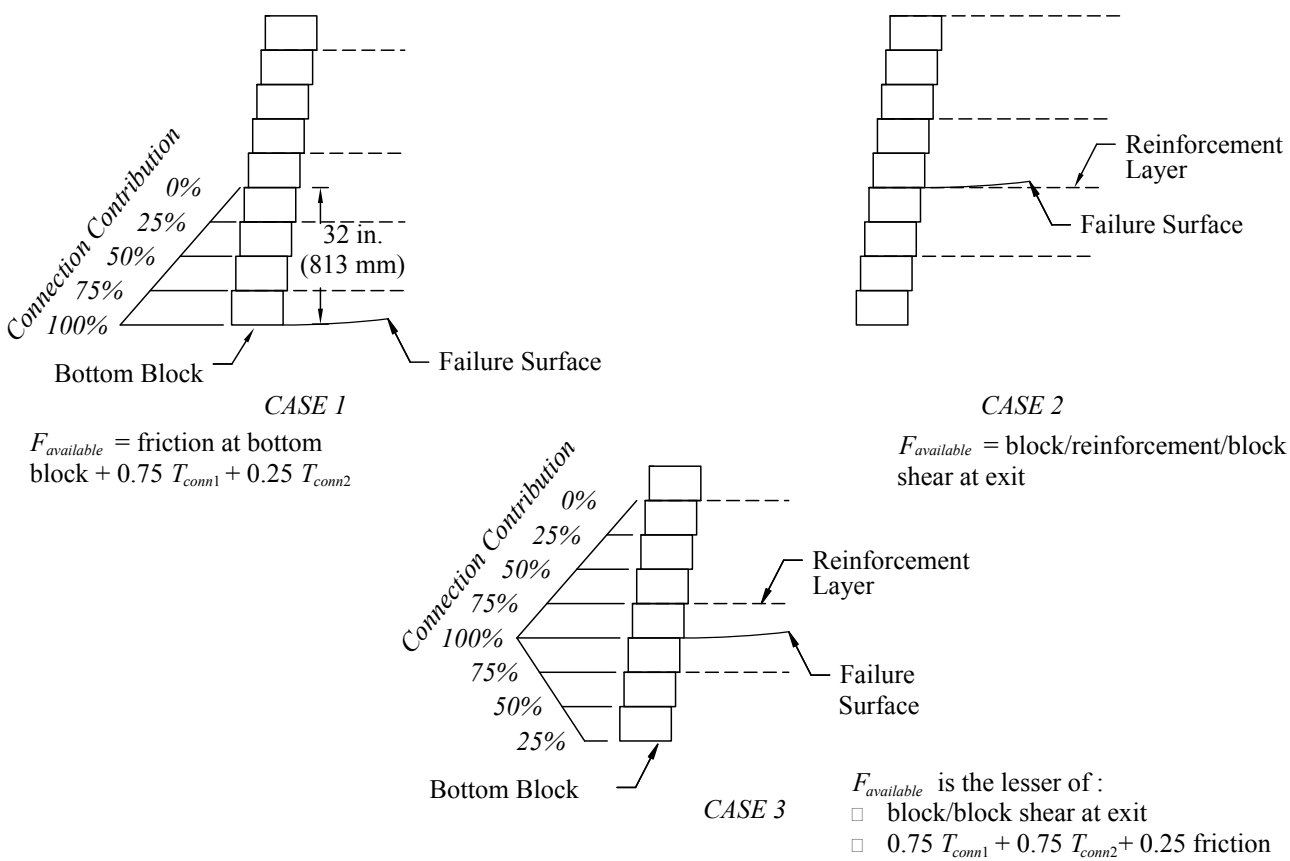

Figure 8-6: Distribution of Connection Capacity Contributions

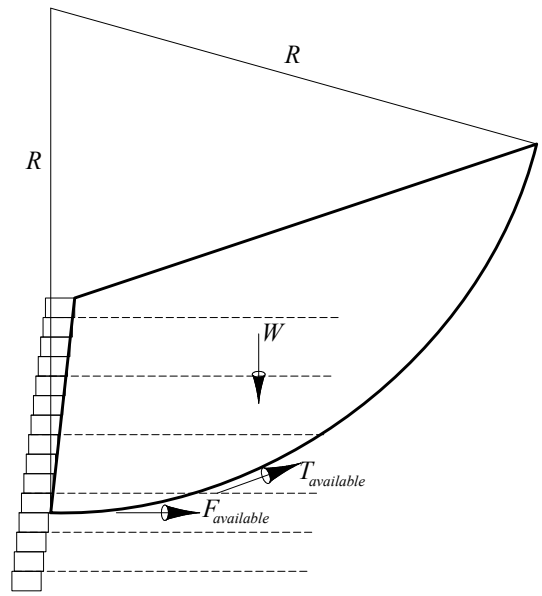

Figure 8-7: Components of ICS Analysis

height is assumed to be 8 in. (203 mm). For blocks with heights other than 8 in. (203 mm), the connection load at each unit interface will vary from this example because the unit interfaces are at different locations on the distribution than the eight inch unit. However, regardless of the unit height, the distribution is still be considered to range from 100 percent down to 0, linearly over 32 in (813 mm).

If applicable, the proportionate contribution of the connection capacity can be added to the facing contribution:

$$F_{available} = \sum (a_{CS} + N \tan \lambda_{CS})$$ (for connection capacity contributions above the failure surface)

For the case where the failure surface is located at a reinforcement layer (Case 2 in Figure 8-6):

$$F_{available} = a'_u + N \tan \lambda'_u$$ (equation for block/reinforcement/block shear resistance)

Finally, for the case where the failure surface is located between two blocks (Case 3 in Figure 8-6), the lesser of the two following quantities:

$$F_{available} = a_u + N \tan \lambda_u$$ (equation for block/block shear resistance)

$$F_{available} = \sum (a_{CS} + N \tan \lambda_{CS})$$ (for connection capacity contributions above and below the failure surface)

where a_{cs} and λ_{cs} will be a_{cs1}, λ_{cs1} or a_{cs2}, λ_{cs2} depending on the normal load (N) (see Figure 7-16).

Again, if applicable, the proportionate contribution of the frictional resistance at the block/leveling pad, $\mu N \tan \phi_d$, can be added to the summation of the connection capacity contribution.

Section 8.6: Summary

In this manual, the ICS process follows a two-part analysis to define the Factor of Safety, as described in Equation 8-2. The first part is to determine the stability of the unreinforced section using the Simplified Bishops Method. The second part is to add the contribution of the reinforcement and the facing.

Substituting Equations 8-4 and 8-5, Equation 8-2 further reduces to:

$$FS = \frac{\sum \frac{(W+P)\times \tan\phi}{m_\alpha} + \sum (T_{available} \times \cos\alpha) + F_{available}}{\sum (W+P)\times \sin\alpha} \qquad \text{[Eq. 8-8]}$$

The minimum FS_{ICS} for each failure plane should be FS_{ICS} = 1.3 (Table 5-2). If initial wall design indicates failure planes with a substandard FS_{ICS}, the resisting forces can be improved in a number of ways: adding layers of reinforcement, decreasing vertical spacing between layers, using higher-strength reinforcement, lengthening reinforcement layers, and improving the reinforced soil properties. Which of these design solutions, or combination of them, is the best strategy will depend on the geometry of the critical failure planes and the efficiencies of the various means to address them. Please note that while strength increases of the reinforcement or soil within the reinforced zone will improve ICS results, these changes may not result in improved foundational or global stability in a geotechnical evaluation. Meeting needed ICS factors of safety with increased reinforcement length may yield the added benefit of improving geotechnical stability issues also. In this regard, it may be helpful for the wall design engineer and geotechnical engineer coordinate efforts to develop most efficient means to meet both wall design stability and global stability requirements.

The wall designer and the geotechnical engineer also must be aware that because of the limited extent of entry and exit points in the ICS analysis, critical failure surfaces may be outside the range of the wall design limits. The greater the inclination of the backslope, the more likely a there is a geotechnical, global stability concern beyond the what the wall design and ICS analysis is addressing. Also, if there is a poor foundation material or a toe slope beneath a wall, it is more likely global failure surfaces exiting below the wall, as such as planes A, F, and G in Figure 8-1 (which are not evaluated by the wall design ICS) will be more critical than ICS failure planes. A wall design with adequate external and ICS factors of safety may have global, deep-seated failure planes that do not have adequate factors of safety. This is why, like any other structures, retaining walls should have a geotechnical evaluation of the foundational and global stability around them, as discussed in Section 12.

Given these stated limits, ICS analysis is certainly not a substitute for a global, geotechnical evaluation. However, in some cases, ICS results can provide an indication that global stability is a critical issue. If the numerous critical failure planes all enter or exit at the outside limits of the ICS analysis, such as at the $2H$ or $H_{ext} + L$ limits behind the wall, this indicates global failure planes beyond this limit are likely critical. Please note however, the global stability around SRWs should be evaluated and addressed regardless of the indications of the ICS, as discussed in Section 12

When the assumed friction angle of the soil in the wall backslope approaches the inclination angle of the backslope, there may be cases where it is not possible, within the wall design, to make the uppermost ICS failure planes meet the minimum ICS factor of safety of 1.3. In these cases, even high-strength layers of grid in every course of units at the top of the wall will not adequately improve the ICS factors of safety exiting out the top wall units. This is an indication the overall backslope, irrespective of the wall, may have low slope stability factors of safety and may be have critical surface slope stability failure planes outside the ICS analysis, such as plane A in Figure 8-1. This methodology considers it acceptable wall design practice to allow the ICS factor of safety for the upper-most failure planes to be less than 1.3, provided the stability of the backslope and top of wall is addressed and evaluated by methods beyond the wall design. Typically such top of wall backslope stability issues can be addressed by placing reinforcement just above the wall face, in the backslope and this solution can be evaluated by a slope stability analysis.

Comment: Version 4.0 of the SRWall Software carries out Internal Compound Stability (ICS) as described above. The terminology used in the reports from the software however, does not match the one presented above. The following relationships should be helpful in matching the terms used in the software:

$\sum F_r$	in the software refers to	$\sum \frac{(W+P)\tan\phi}{m_\alpha}$
$\sum F_s$	in the software refers to	$\sum (W+P)\sin\alpha$
$\sum F_{grid}$	in the software refers to	$\sum T_{available} \times \cos\alpha$
$\sum V_u$ or $\sum Conn$	in the software refers to	$F_{available}$
$\sum Wt$	in the software refers to	$\sum W$
$\sum Ql$ or $\sum Qd$	in the software refers to	$\sum P$

Section 8.7: Example Calculations

An example calculation using this design methodology to analyze a typical design problem for a generic reinforced soil SRW is presented in Appendix B. The example calculation serves to illustrate many of the consequences of certain design property assumptions and important intermediate calculation steps.

SECTION 9
SEISMIC DESIGN OF SEGMENTAL RETAINING WALLS

This section describes a method of analysis and design for the stability of geosynthetic reinforced segmental retaining walls (SRW) under seismic loading. The method extends the approach for static structures (Sections 6 and 7) and will closely parallel these sections.

Section 9.1: Design Assumptions

9.1.1: Assumptions

The seismic design method adopts a pseudo-static approach and is generally based on the Mononobe-Okabe (M-O) method to calculate dynamic earth forces. The design and analysis methodology described within this document applies to the following conditions:

1. SRW structures are free-standing and able to displace horizontally at the base and yield laterally through the height of the wall.
2. Reinforced and retained soils are cohesionless, unsaturated, and homogeneous. Soil strength is described by the Mohr-Coulomb failure criterion. The apparent cohesive strength component reported under Mohr-Coulomb failure criterion is ignored.
3. Vertical ground acceleration is zero (k_v=0). Vertical ground acceleration is ignored for the pseudo-static analysis presented based on the presumption that the horizontal and vertical acceleration associated with a seismic event do not coincide.
4. Geometry is limited to that presented in this document (i.e. infinite or broken-backslope, and constant horizontal foreslope angle).
5. Retained and reinforced soils are placed to a depth corresponding to the full height of the placed SRW facing units (i.e. wall design height (H))
6. Cap units are ignored in the stability analysis and assumed to be securely attached to the underlying course of SRW units in such a manner that they cannot be dislodged during ground shaking.
7. The stabilizing influence of the wall embedment is ignored with the exception of bearing capacity analyses.
8. No permanent surcharge or footing load exists within the active failure wedge and may require a more exhaustive analysis, which is beyond the scope of this manual.
9. Global Stability involving failure of soil volumes beyond the base of the SRW unit column and/or geosynthetic reinforced fill zone is not considered.
10. SRW structures are built on competent foundations for which excessive settlement, squeezing or liquefaction are not potential sources of instability.

9.1.2 – Need for Separate Static and Seismic Analyses

It is important to note the SRW seismic analysis explained in this section must be performed in addition to, not in lieu, of the static analysis. Seismic analysis is not just a static analysis with higher loads; this seismic analysis has lower minimum factors of safety, ignores live loads, and allows for higher geogrid design strengths compared to static analyses. Because of these differences, an engineer could satisfy seismic requirements this seismic section while, incorrectly, not meeting the static requirements of Section 6 and 7. So both seismic and static analyses must be performed separately, with the final wall design layout providing sufficient factors of safeties for both the seismic and static cases, independently.

Section 9.2: Calculation of Earth Forces and Failure Plane

A pseudo-static approach based on the Mononobe-Okabe (M-O) method is used to calculate the total active earth force (P_{aE}) imparted by the backfill soil on a retaining wall structure. The application of force against the facing column of a conventional SRW structure is illustrated in Figure 9-1 and includes the influence of ground acceleration due to earthquake loads. Force (P_{aE}) is calculated as follows:

$$P_{aE} = 0.5(1 \pm k_v)K_{aE}\gamma H^2 \qquad \text{[Eq. 9-1]}$$

where:

γ = unit weight of the soil
H = height of the wall
P_{aE} = dynamic earth force (force/length of wall)

The general form of the dynamic earth pressure coefficient (K_{aE}) is as follows:

$$K_{aE} = \frac{\cos^2(\phi + \omega - \theta)}{\cos\theta\cos^2\omega\cos(\delta - \omega + \theta)\left[1 + \sqrt{\frac{\sin(\phi + \delta)\sin(\phi - \beta - \theta)}{\cos(\delta - \omega + \theta)\cos(\omega + \beta)}}\right]^2} \qquad \text{[Eq. 9-2]}$$

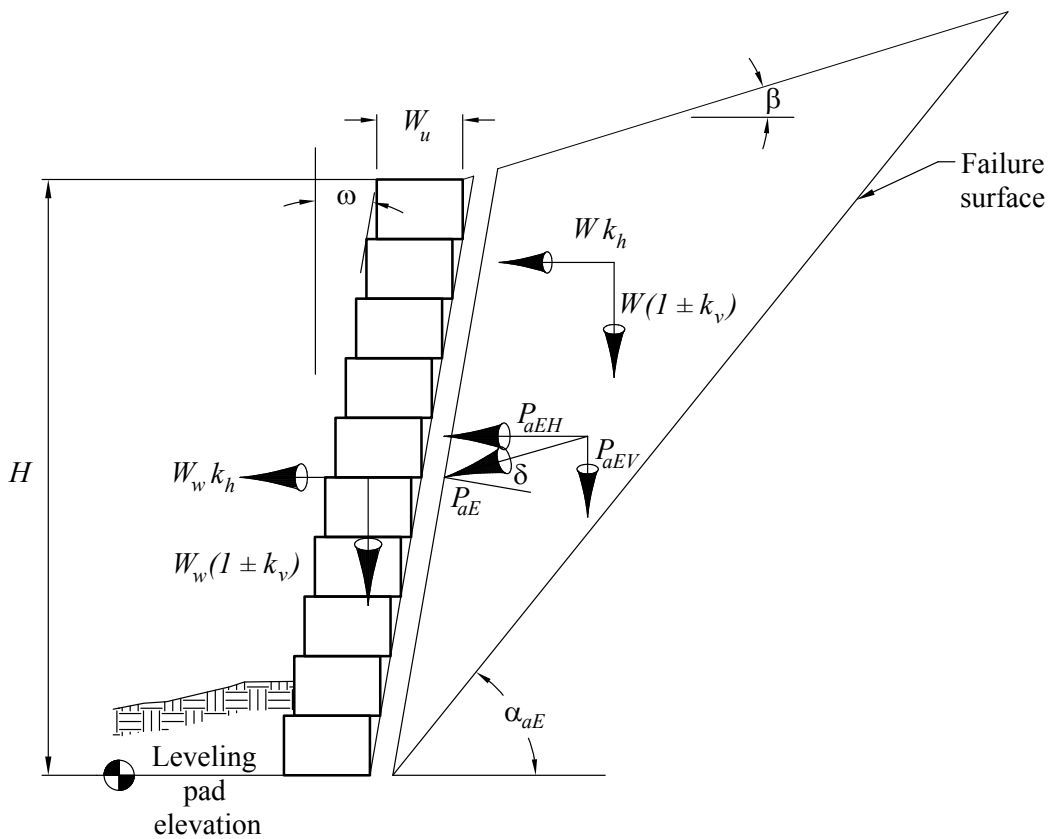

Figure 9-1: Forces and Geometry used in Pseudo-Static Seismic Analysis of SRWs

where:

ϕ = peak soil friction angle,
ω = wall facing column inclination (+ clockwise from the vertical),
δ = mobilized interface friction angle at the back of the block (or the reinforced soil zone),
β = backslope angle (from horizontal), and
θ = seismic inertia angle given by:

$$\theta = a\tan\left(\frac{k_h}{1 \pm k_v}\right) \qquad \text{[Eq. 9-3]}$$

Quantities k_h and k_v are horizontal and vertical *seismic coefficients*, respectively, expressed as fractions of the gravitational constant (g) and are further defined in Section 9.4. The values of k_h and k_v are assumed to be uniform and constant throughout the facing column, the reinforced soil mass, and in the backfill (retained) soils. In this manual, horizontal inertial forces are assumed to act outwards (+ k_h) to be consistent with the notion of active earth pressure conditions. The convention adopted here is that a positive vertical seismic coefficient (+ k_v) corresponds to a seismic inertial force that acts downward and a negative seismic coefficient (- k_v) corresponds to a seismic inertial force that acts upward.

For the case $k_v = 0$, Equation 9-3 simplifies to:

$$\theta = a\tan k_h \qquad \text{[Eq. 9-4]}$$

Examination of the trigonometric terms in Equation 9-2 shows that solutions are only possible for $\theta \leq \phi - \beta$. Hence, the maximum value of the horizontal seismic coefficient for which there are solutions to Equation 9-2 is restricted to $k_h \leq \tan(\phi - \beta)$. It is clear from this equation that the angle of slopes at the crest of the retaining wall will be limited by the friction angle of the soil and the coefficient of acceleration. It also implies that modeling a slope as a surcharge may be inappropriate under these conditions.

And Equation 9-1 becomes:

$$P_{aE} = 0.5\, K_{aE}\, \gamma H^2 \qquad \text{[Eq. 9-5]}$$

For the case $k_v = 0$ this leads to the following constraint:

$$k_h \leq \tan(\phi - \beta) \qquad \text{[Eq. 9-6]}$$

Following the approach proposed by Seed and Whitman (1970) [Ref. 105], AASHTO/FHWA recommend that the total dynamic earth force (P_{aE}) be decomposed into two components representing the *static* earth force component (P_s) and the *dynamic earth force increment* due to seismic effects (ΔP_{dyn}).

Hence:

$$P_{aE} = P_s + \Delta P_{dyn} \qquad \text{[Eq. 9-7]}$$

or

$$(1 \pm k_v)\, K_{aE} = K_a + \Delta K_{dyn} \qquad \text{[Eq. 9-8]}$$

where:

K_a = *static* active earth pressure coefficient, and
ΔK_{dyn} = *dynamic increment* active earth pressured coefficient

For the case $k_v = 0$, Equation 9-8 simplifies to:

$$\Delta K_{dyn} = K_{aE} - K_a \qquad \text{[Eq. 9-9]}$$

Recall from Sections 6 & 7, that the magnitude of the (static) active earth force P_s is calculated as:

$$P_s = 0.5\, K_a\, \gamma H^2$$

where:

$$K_a = \frac{\cos^2(\phi+\omega)}{\cos^2\omega\cos(\omega-\delta)\left[1+\sqrt{\frac{\sin(\phi+\delta)\sin(\phi-\beta)}{\cos(\omega-\delta)\cos(\omega+\beta)}}\right]^2} \qquad \text{[Eq. 5-3]}$$

In the stability calculations to follow, both the horizontal and vertical components of active earth forces are used (see inset diagram in Figure 9-1). Therefore, it is convenient in the stability calculations presented later in this section to use quantities K_{aH}, K_{aV} and ΔK_{dynH}, ΔK_{dynV} representing the *horizontal* and *vertical* components of earth pressure coefficients.

Hence:

for the *horizontal* components

$$K_{aH} = K_a \cos(\delta - \omega) \qquad \text{[Eq. 9-10]}$$

$$K_{aEH} = K_{aE} \cos(\delta - \omega) \qquad \text{[Eq. 9-11]}$$

$$\Delta K_{dynH} = \Delta K_{dyn} \cos(\delta - \omega) \qquad \text{[Eq. 9-12]}$$

for the vertical components:

$$K_{aV} = K_a \sin(\delta - \omega) \qquad \text{[Eq. 9-13]}$$

$$K_{aEV} = K_{aE} \sin(\delta - \omega) \qquad \text{[Eq. 9-14]}$$

$$\Delta K_{dynV} = \Delta K_{dyn} \sin(\delta - \omega) \qquad \text{[Eq. 9-15]}$$

From these active earth coefficients, the total horizontal and vertical dynamic earth forces and the dynamic earth force increments can be calculated. The amount of the dynamic earth force increment applied varies with the type of failure mode being analyzed. Both the value of K_{aE} and the portion of the dynamic load ΔP_{dyn} applied vary with the type of wall and type of analysis. Per standard convention, only half the dynamic earth force increment is applied when calculating external seismic earth forces. For internal overstress, pullout and facial connection strength analyses for reinforced walls, the full ΔP_{dyn}, per Equation 9-7, is applied. Later sections provide specific forms of Equations 9-10 through 9-21 for each type of analysis.

The horizontal components of static earth force (P_{sH}) and dynamic earth force increment (ΔP_{dynH}) and total dynamic earth force (P_{aEH}) are:

$$P_{sH} = 0.5\, K_{aH}\, \gamma H^2 \qquad \text{[Eq. 9-16]}$$

$$P_{aEH} = 0.5\, K_{aEH}\, \gamma H^2 = P_{sH} + \Delta P_{dynH} \qquad \text{[Eq. 9-17]}$$

$$\Delta P_{dynH} = 0.5\, \Delta K_{dynH}\, \gamma H^2 = P_{aEH} - P_{sH} \qquad \text{[Eq. 9-18]}$$

and, similarly, the vertical components are:

$$P_{sV} = 0.5\ K_{aV}\ \gamma H^2 \qquad \text{[Eq. 9-19]}$$

$$P_{aEV} = 0.5\ K_{aEV}\ \gamma H^2 = P_{sV} + \Delta P_{dynV} \qquad \text{[Eq. 9-20]}$$

$$\Delta P_{dynV} = 0.5\ \Delta K_{dynV}\ \gamma H^2 = P_{aEV} - P_{sV} \qquad \text{[Eq. 9-21]}$$

Section 9.3: Distribution of Sesimic Earth Pressures

The dynamic earth pressure distributions illustrated in Figure 9-2 are used for external, internal and facing stability analyses of conventional and geosynthetic reinforced segmental retaining walls. Note that the dynamic earth force increment of the total seismic earth forces is uniformly distributed and acts at half the height of the wall [Ref. 68]. As shown in Figure 9-2c, the normalized point of application for the resultant of the total seismic earth force (P_{aE}) varies over the range $0.33 < m < 0.67$ depending on the magnitude of ΔK_{dyn}. As stated in Section 9.2, only half the dynamic earth force increment shown in Figure 9-2b is applied in external analyses. While the magnitude of the dynamic force increment will vary with type of analysis, it always acts at half the wall height being analyzed, as shown in Figure 9-2b (example shown is internal case). The wall height (H or H_{ext}) used to calculate the resultant location will vary with type of wall and type of analysis.

Section 9.4: Seismic Acceleration Coefficients

The seismic methodology described herein uses the AASHTO/FHWA approach for the selection of seismic acceleration coefficient values. Because for most earthquakes the horizontal acceleration components are considerably greater than the vertical acceleration components, it seems reasonable to conclude that in such cases the influence of the vertical acceleration coefficient (k_v) can be neglected for practical purposes (Seed and Whitman (1970) [Ref. 105], Wolfe et al. (1978) [Ref. 106], and Bathurst and Cai (1995) [Ref. 107]). Nevertheless, engineering judgment must be applied in the selection of vertical and horizontal seismic coefficients based on experience, state of practice, and actual project site conditions. Considerations of vertical acceleration are beyond the scope of this manual.

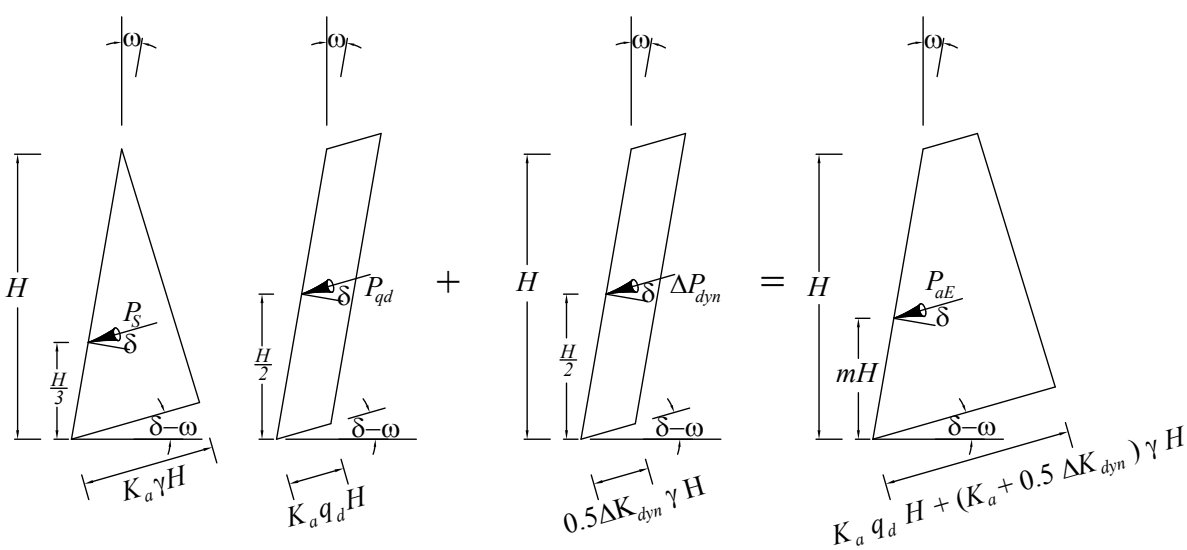

a) Static Component + b) Dynamic Increment = c) Total Seismic Pressure Distribution

Figure 9-2: Earth Pressure Distributions Due to Self-Weight *(Internal Analysis Case)*

For the horizontal acceleration coefficient in this manual, a displacement method approach is considered, which explicitly incorporates horizontal wall movement in the stability analysis.

For internal and facial analysis of a reinforced wall (tensile overstress, pullout and connection strength calculations), the horizontal acceleration coefficient (k_{hint}) used is based on AASHTO/FHWA guidelines. Specifically, k_{hint} is related to A and $d_{seismic}$ as follows:

$$k_{hint} = (1.45 - A)A \qquad \text{[Eq. 9-22]}$$

where:

A = Specified horizontal peak ground acceleration express as a fraction of the gravitational constant g. The site-specific values of A represent a 90% probability of that value not being exceeded in 50 years. Values for A are published under AASHTO (2002) [Ref. 36].

A is limited to less than 0.45g in Equation 9-22. Where A is greater than 0.45g, use $k_{hint} = A$.

$d_{seismic}$ = the lateral deflection that the retaining wall can be designed to withstand during a seismic event.

An estimate of the magnitude of the permanent base deformation that may be anticipated for these structures is 10A in. (254A mm). For example, for a peak acceleration of 0.29g, a gravity structure must be able to tolerate approximately 3 in. (76 mm) of lateral movement. Conversely, given an acceptable permanent deformation criterion for a SRW structure, a limiting value of A can be determined.

For external analysis (base sliding and overturning calculations), the horizontal acceleration coefficient (k_{hhext}) used in this document is also based on AASHTO guidelines. Specifically, k_{hext} is related to A and $d_{seismic}$ as follows:

$$k_{hext} = \frac{A}{2} \qquad \text{[Eq. 9-23]}$$

If displacement analysis is considered,

$$k_{hext} = 0.74A\left(\frac{A}{d_{seismic}}\right)^{0.25} \text{(in inches)} \qquad \text{[Eq. 9-24]}$$

Section 9.5: Inertial Forces

In addition to static and dynamic increment earth forces, the inertial forces caused by the wall itself contribute to the total loading on a wall in a seismic event. Generally, the inertial forces are determined by applying the horizontal seismic coefficient (k_h) to the weight of the wall system being analyzed. For conventional walls, and for internal and facial analysis of reinforced walls, inertial forces are due to the weight of the wall facing units. For external and internal sliding analysis of reinforced walls, the weight creating inertial forces includes both the wall facing units and a reduced-width portion of the reinforced soil mass and slope above are used.

Section 9.6: Surcharge Loads

Live loads acting at the top of the soil surface behind the facing column can be ignored for earthquake analysis given their transient nature. For dead loads, this methodology only considers the static portion of earth forces due to dead loads, not the dynamic increment earth forces or inertial forces such surcharges may exert. No closed form solutions are available to consider explicitly the influence of a uniformly distributed surcharge pressure as is the case for static load environments. Thus accurate analysis of the dynamic influence of a dead load surcharge is beyond the scope of

this manual. Accordingly, design professionals should recognize this when considering placement or evaluation of significant dead loads on a retaining wall in seismically active regions. A possible strategy to analyze a uniformly distributed surcharge load is to design the wall for an increased height equal to q/γ where q is the uniformly distributed surcharge pressure and γ is the unit weight of the reinforced or retained soil (whichever value is larger).

Section 9.7: Conventional Segmental Retaining Walls

Conventional gravity walls for seismic should be evaluated for the same failure modes as the static analysis: sliding, overturning, internal sliding, and geotechnical concerns as outlined Section 6.4 and 6.5. For the seismic analysis, the resisting forces are the same as static analysis in Section 6, but with the addition of the any resisting forces due to the vertical component of the dynamic earth force increment. Driving forces are increased over static loads by the inertial force due to the weight of the wall and the dynamic earth force increment (ΔP_{dyn}). Also, both driving and resisting static forces for seismic analysis ignore the effects of live loads present for conventional static analysis in Section 6.

The seismic active earth coefficient for conventional walls is:

$$K_{aEcon} = \frac{\cos^2(\phi_{rc} + \omega - \theta_{ext})}{\cos\theta_{ext}\cos^2\omega\cos(\delta_c - \omega + \theta_{ext})\left[1 + \sqrt{\frac{\sin(\phi_{rc} + \delta_c)\sin(\phi_{rc} - \beta_{con} - \theta_{ext})}{\cos(\delta_c - \omega + \theta_{ext})\cos(\omega + \beta_{con})}}\right]^2} \qquad \text{[Eq.9-25]}$$

where,

$$\theta_{ext} = a\tan\left(k_{hext}\right) \qquad \text{[Eq. 9-26]}$$

and the other remaining terms are defined in Section 6.4.1

9.7.1: External Stability

The total seismic forces used for external analysis include the static earth forces (excluding live loads), the inertial force due to the wall units, and the dynamic earth force increment as shown in Figure 9-3. The resisting forces are

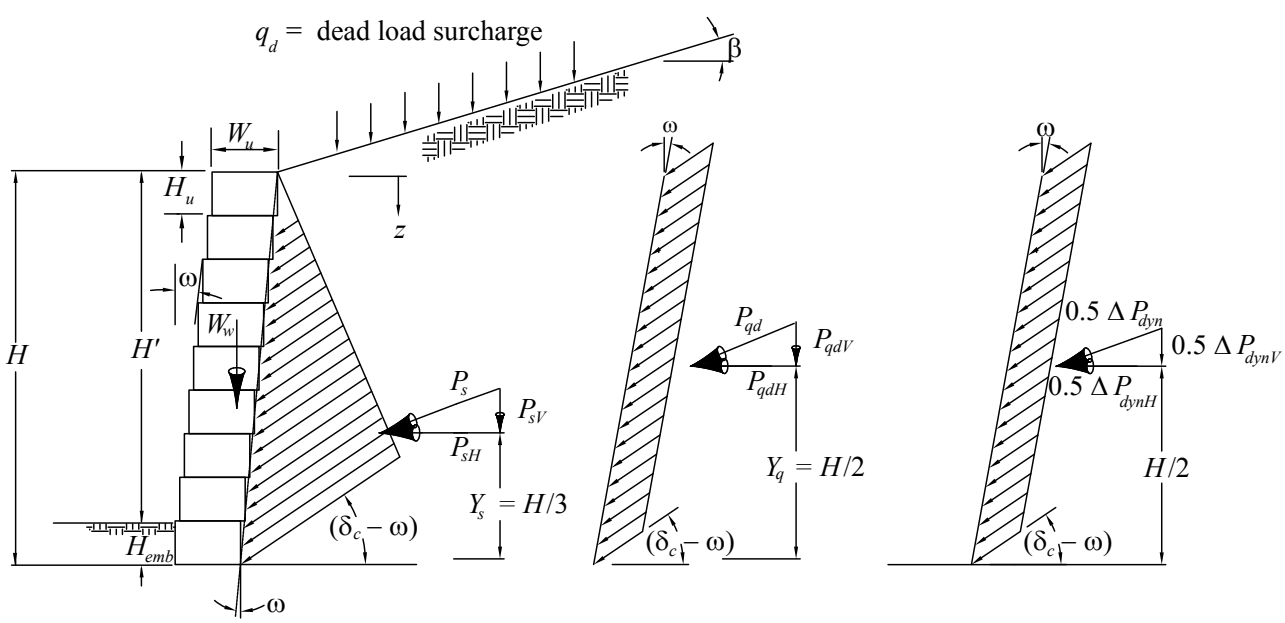

Figure 9-3: Forces and Geometry for External Stability Analysis of Conventional SRWs with Seismic Loading

the weight of the wall units and vertical component of the static and dynamic increment earth force. As explained in Section 9.2, only one-half of the dynamic earth force is applied for external analyses.

The specific form of the general Equations 9-10 through 9-21, for external analysis of conventional walls, using the above K_{aEcon} applied over the height H are:

Horizontal Components

$$K_{aEH} = K_{aEcon}\cos(\delta_c - \omega) \quad \text{[Eq. 9-27]}$$

$$\Delta K_{dynH} = (K_{aEcon} - K_{acon})\cos(\delta_c - \omega) = \Delta K_{dyn}\cos(\delta_c - \omega) \quad \text{[Eq. 9-28]}$$

$$P_{aEH} = 0.5K_{aEHcon}\gamma_r H^2 \quad \text{[Eq. 9-29]}$$

$$\Delta P_{dynH} = 0.5\Delta K_{dynH}\gamma_r H^2 = P_{aEH} - P_{sH} \quad \text{[Eq. 9-30]}$$

As explained in Section 9.2, only one-half of the dynamic earth force is applied for external analyses. From this, the total horizontal component of dynamic earth force for external conventional analysis P_{aEHcon}, is:

$$P_{aEHcon} = P_{sH} + P_{qdH} + 0.5\Delta P_{dynH} \quad \text{[Eq. 9-31]}$$

Vertical Components

$$K_{aEV} = K_{aEcon}\sin(\delta_c - \omega) \quad \text{[Eq. 9-32]}$$

$$\Delta K_{dynV} = (K_{aEcon} - K_{acon})\sin(\delta_c - \omega) = \Delta K_{dyn}\sin(\delta_c - \omega) \quad \text{[Eq. 9-33]}$$

$$P_{aEV} = 0.5K_{aEVcon}\gamma_r H^2 \quad \text{[Eq. 9-34]}$$

$$\Delta P_{dynV} = 0.5\Delta K_{dynV}\gamma_r H^2 = P_{aEV} - P_{sV} \quad \text{[Eq. 9-35]}$$

The static terms, K_{acon}, P_{sH}, P_{qdH}, P_{sV}, and P_{qdV}, in the above equations are calculated per Equations 6-1 to 6-16 in static Section 6.4.1.

9.7.1.1: Base Sliding (Refer to Section 6.4.3)

Seismic sliding resistance (R_{scdyn}) is the static resistance (R_{sc}) plus the effect of the vertical component of dynamic earth force:

$$R_{scdyn} = R_{sc} + \mu_b 0.5\Delta P_{dynV}\tan\phi = \mu_b(W_W + P_{sV} + P_{qdV} + 0.5\,\Delta P_{dynV})\tan\phi \quad \text{[Eq. 9-36]}$$

where R_{sc} is calculated using Equation 6-21.

The driving forces for seismic sliding are the horizontal earth forces and inertial wall load.

The factor of safety against base sliding ($FS_{slseismic}$) at the bottom of the lowermost facing unit can be expressed as:

$$FS_{slseismic} = \frac{R_{scdyn}}{P_{sH} + P_{qdH} + 0.5\Delta P_{dynH} + k_{hext}W_w} \quad \text{[Eq. 9-37]}$$

here W_w is calculated using 6-20.

The calculated value of $FS_{slseismic}$ should not be less than 1.1 (Table 5-2).

9.7.1.2 Base Overturning (Refer to Section 6.4.4)

The resisting moment in seismic is similar to the static moment M_r but includes vertical component of the dynamic earth force increment, as follows:

$$\begin{aligned} M_{rseismic} &= M_r + 0.5\Delta P_{dynV}\left(W_u + \left(\frac{H}{2}\right)\tan\omega\right) \\ &= W_w X_w + P_{sV}\left(W_u + \left(\frac{H}{3}\right)\tan\omega\right) + \left[(P_{qdV} + 0.5\Delta P_{dynV})\left(W_u + \left(\frac{H}{2}\right)\tan\omega\right)\right] \end{aligned} \quad \text{[Eq. 9-38]}$$

where static M_r is calculated using Equation 6-23 and X_w the horizontal moment arm of the wall unit weight, Equation 6-24.

The seismic overturning moment is calculated:

$$M_{Oseismic} = k_{hext}W_w\left(\frac{H}{2}\right) + P_{sH}\left(\frac{H}{3}\right) + P_{qdH}\left(\frac{H}{2}\right) + 0.5\Delta P_{dynH}\left(\frac{H}{2}\right) \quad \text{[Eq. 9-39]}$$

The factor of safety against base sliding ($FS_{otseismic}$) at the bottom of the lowermost facing unit can be expressed as:

$$FS_{otseismic} = \frac{M_{rseismic}}{M_{Oseismic}} \quad \text{[Eq. 9-40]}$$

The calculated value of $FS_{otseismic}$ should not be less than 1.1 (Table 5-2).

9.7.1.3: Bearing Pressure (Refer to Section 6.4.5)

The applied bearing stress at the base of the leveling pad is calculated as:

$$Q_{acseismic} = \frac{[W_W + P_{sV} + P_{qV} + 0.5\Delta P_{dynV}]}{B'_c} \quad \text{[Eq. 9-41]}$$

where,

$$B'_c = W_u + h_{lp} - 2e_{seismic} \quad \text{[Eq. 9-42]}$$

$$e_{seismic} = \frac{\left[k_{hext}W_w\left(\frac{H}{2}\right) + P_{sH}\left(\frac{H}{3}\right) + P_{qdH}\left(\frac{H}{2}\right) + 0.5\Delta P_{dynH}\left(\frac{H}{2}\right)\right] - W_w e_w}{W_w} \quad \text{[Eq. 9-43]}$$

9.7.2: Internal Stability

9.7.2.1 Internal Sliding (Refer to Section 6.5)

The factor of safety against internal sliding ($FS_{scseismic(z)}$) at the interface between two facing units located at depth z below the crest of the facing column can be expressed as:

$$FS_{scseismic(z)} = \frac{V_{u(z)}}{P_{aEHext(z)} + k_{hext} W_{w(z)}} \qquad \text{[Eq. 9-44]}$$

The horizontal component of the external total seismic earth force ($P_{aEHext(z)}$) acting over the depth z, taken at the back of the facing column at each unit height increment is calculated using the following expression:

$$P_{aEHext(z)} = P_{sH(z)} + 0.5\Delta P_{dynH(z)} \qquad \text{[Eq. 9-45]}$$

Note that the total height of the facing column above the sliding surface is used in this calculation. While this is an internal analysis, the load is calculated in the same manner as an external analysis (just over a shorter height–see Section 6.5) so only half the dynamic load is applied.

Quantity $V_{u(z)}$ is the peak interface shear capacity at the internal sliding interface at depth z and is calculated as follows:

$$V_{u(z)} = a_u + W_{w(z)} \tan \lambda_u \qquad \text{[Eq. 9-46]}$$

The calculated value of $FS_{scseismic(z)}$ should not be less than 1.1 (Table 5-2).

Section 9.8: Geosynthetic Reinforced Segmental Retaining Walls

Reinforced SRWs are evaluated for the same failure modes as static analysis: external, internal, facing, and geotechnical concerns, as outlined in Sections 7.4, 7.5, 7.6 and 12. Seismic driving forces are the static forces, the inertial forces, and the dynamic earth forces (ΔP_{dyn}). Seismic resisting forces are the same as static resisting forces presented in Section 7, with the addition of the resistance from the vertical component of the dynamic earth force. Also, both driving and resisting static forces for seismic analysis ignore the effects of live loads present in the static analysis of Section 7.

9.8.1: External Stability

Driving forces for external seismic analysis are the static loads plus the inertial forces (P_{IR}) and one-half the dynamic earth forces (ΔP_{dyn}). The inertial forces used for external analysis of reinforced walls are those due to the wall face units and to a reduced width of the reinforced soil mass, $0.5H$. The simplified geometry and body forces illustrated in Figure 9-3 are used in the external stability calculations to follow. Here:

W_{rs} = total weight of the reinforced zone extending from the face of the facing column to length $L_{min} = 0.5H$ beyond the face of the wall and having height H, and

$W_{r\beta}$ = contribution of the wedge of soil in the slope above the crest of the wall (above height H)

The seismic active earth force coefficient for external analysis is:

$$K_{aEext} = \frac{\cos^2(\phi_r + \omega - \theta_{ext})}{\cos\theta_{ext} \cos^2\omega \cos(\delta_e - \omega + \theta_{ext}) \left[1 + \sqrt{\frac{\sin(\phi_r + \delta_e)\sin(\phi_r - \beta_{ext} - \theta_{ext})}{\cos(\delta_e - \omega + \theta_{ext})\cos(\omega + \beta_{ext})}}\right]^2} \qquad \text{[Eq. 9-47]}$$

where,

$$\theta_{ext} = a\tan k_{hext} \qquad \text{[Eq. 9-48]}$$

and the other remaining terms β_{ext}, ϕ_r and δ_e are defined in static Section 7.4.1.

9.8.1.1: External Earth Forces and Locations

For the reinforced wall external analysis case, the specific form of the general equations of earth forces, Equations 9-10 through 9-21, use the above K_{aEext} over an applied height H_{ext}. The terms H_{ext}, K_{aext}, P_{sH}, P_{qdH}, P_{sV}, and P_{qdV} in these following equations are calculated per static Sections 7.4.1.1 and 7.4.1.2.

Horizontal Components

$$K_{aEHext} = K_{aEext}\cos(\delta_e - \omega) \qquad \text{[Eq. 9-49]}$$

$$\Delta K_{dynH} = (K_{aEext} - K_{aext})\cos(\delta_e - \omega) = \Delta K_{dyn}\cos(\delta - \omega) \qquad \text{[Eq. 9-50]}$$

$$P_{aEH} = 0.5K_{aEHext}\gamma H_{ext}^{\ 2} \qquad \text{[Eq. 9-51]}$$

$$\Delta P_{dynH} = 0.5\Delta K_{dynH}\gamma H_{ext}^{\ 2} = P_{aEH} - P_{sH} \qquad \text{[Eq. 9-52]}$$

From this, the horizontal component of the total seismic earth forces for external analysis (P_{aEHext}) can be calculated from the static earth forces due to soil and dead load surcharge (the live load effect is ignored) and one-half of the dynamic earth force as follows:

$$P_{aEHext} = P_{sH} + P_{qdH} + 0.5\Delta P_{dynH} \qquad \text{[Eq. 9-53]}$$

The horizontal components of the forces P_{sH} and P_{qdH} act at vertical distances of $^1/_3 H_{ext}$ and $^1/_2 H_{ext}$ as defined by Y_s and Y_q in Equations 7-18 and 7-19 as shown in Figures 7-7 and 9-4. The dynamic earth force (ΔP_{dynH}) which is considered uniform like a surcharge, also acts at Y_q.

Vertical Components

$$K_{aEVext} = K_{aEext}\sin(\delta_e - \omega) \qquad \text{[Eq. 9-54]}$$

$$\Delta K_{dynV} = (K_{aEext} - K_{aext})\sin(\delta_e - \omega) = \Delta K_{dyn}\sin(\delta - \omega) \qquad \text{[Eq. 9-55]}$$

$$P_{aEV} = 0.5K_{aEVext}\gamma H_{ext}^{\ 2} \qquad \text{[Eq. 9-56]}$$

$$\Delta P_{dynV} = 0.5\Delta K_{dynv}\gamma H_{ext}^{\ 2} = P_{aEV} - P_{sV} \qquad \text{[Eq. 9-57]}$$

The total vertical component of seismic earth force for external analysis P_{aEVext} is:

$$P_{aEVext} = P_{sV} + P_{qdV} + 0.5\Delta P_{dynV} \qquad \text{[Eq. 9-58]}$$

The resultant of the static vertical components of the forces P_{sV} and P_{qdV} act at horizontal distances slightly greater than L if the wall is battered, defined as X_s and X_q in Equations 7-24 and 7-25 and shown in Figure 7-7 . The resultant of the dynamic earth force (ΔP_{dynV}) acts at X_q also.

9.8.1.2: Inertial Forces and Locations

The quantity P_{IR} in Figure 9-4 denotes the horizontal inertial force due to the reinforced mass used in external stability calculations. Different strategies have been proposed in North America to compute $P_{IR} < k_h W_r$ to ensure reasonable designs (Bathurst and Alfaro 1996 [Ref. 108]). The justification is based on the expectation that horizontal inertial forces induced in the reinforced mass and the earth forces due to the retained (backfill) soil zone will not reach peak values at the same time during a seismic event.

The method adopted here uses the AASHTO/FHWA approach and assumes that the horizontal inertial force (P_{IR}) is due to an equivalent mass comprising the facing column and also a portion of the reinforced soil zone extending to a distance 0.5*H* beyond the face of the wall. The general approach is illustrated in Figure 9-4 and the total inertial load for external analysis (P_{IR}) is calculated as follows.

$$P_{IR} = k_{hext}(W_w + W_i' + W_\beta') \qquad \text{[Eq. 9-59]}$$

The inertial forces of the wall facing units W_w and the reduced-width reinforced soil zone W_i' act at half the wall height *H*.

The weight of reduced-width reinforced mass behind the wall face, W_i' is:

$$W_i' = (0.5H - W_u)H\gamma_i \qquad \text{[Eq. 9-60]}$$

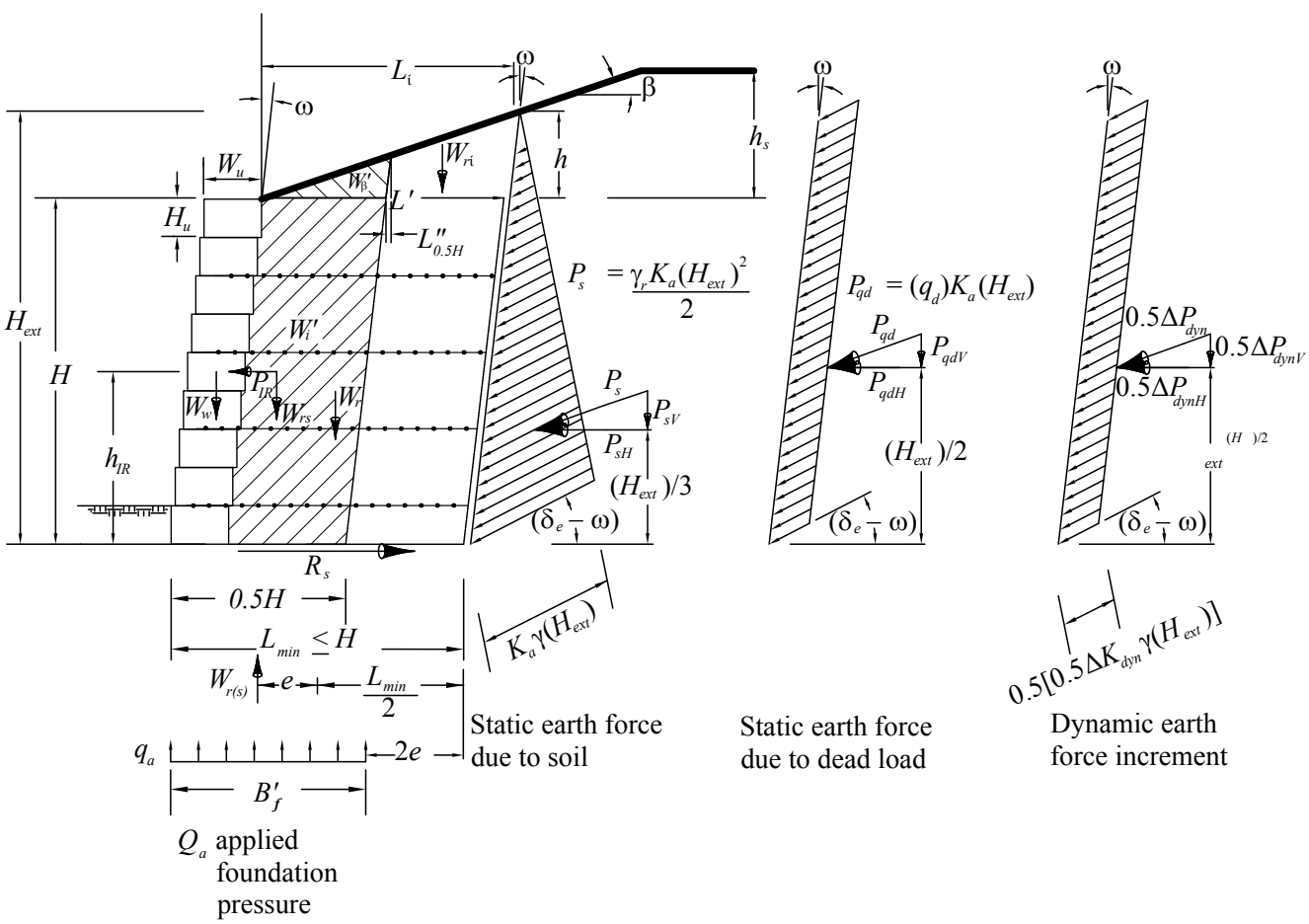

Figure 9-4: Geometry and Forces used to Calculate External Stability in Reinforced SRWs

W'_β the weight of top slope above the reduced-width reinforced inertial mass varies with the geometry at the top of the wall. The height of a slope that is continuous to the back of the reduced-width reinforced mass (h') must be figured to determine cases. The equivalents to back of the reinforced zone, L'' and h (Equations 7-3 and 7-5) are at back of the reduced-width zone, $L''_{0.5H}$ and h' respectively, as shown on Figure 9-5 and are calculated as follows:

$$L''_{0.5H} = \frac{(0.5H - W_u)\tan\beta\tan\omega}{1 - \tan\beta\tan\omega} \qquad \text{[Eq. 9-61]}$$

$$h' = (0.5H - W_u + L''_{0.5H})\tan\beta \qquad \text{[Eq. 9-62]}$$

For slope Case A: $h_s < h'$ (slope breaks before back of 0.5H wide mass)

$$W'_\beta = W_{r\beta 1} + W'_{r\beta 2} + W_{r\beta 3} \qquad \text{[Eq. 9-63]}$$

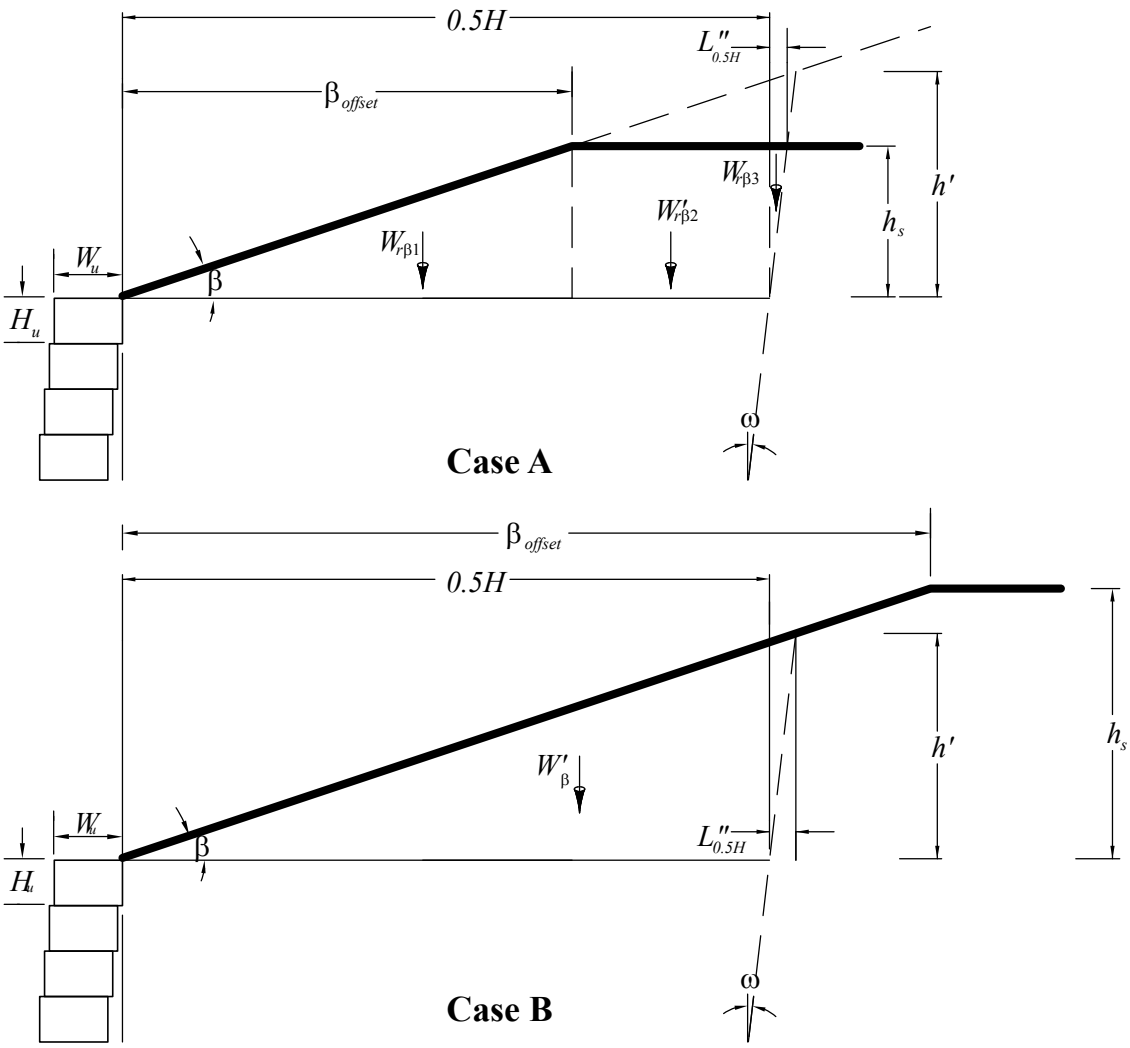

Figure 9-5: Top of Wall Geometry At 0.5*h* Distance from Back of Wall

where the weight of the triangular portions of the reduced-width top slope, $W_{r\beta 1}$ and $W_{r\beta 3}$, are the same as for the full-width reinforced slope, defined static Section 7 in Equation 7-31A1 and Equation 7-31A3. The weight of center portion of the reduced-width top slope, $W'_{r\beta 2}$ is a modification of the full-width static term $W_{r\beta 2}$ (Equation 7-31A2). $W'_{r\beta 2}$ is calculated as follows:

$$W'_{r\beta 2} = \left[(0.5H - W_u - \beta_{offset}) h_s \right] \gamma_i \qquad \text{[Eq. 9-64]}$$

For static analysis, only the horizontal resisting moment arms of soil weights were needed. But in this seismic analysis, these soil weights (of the reduced-width reinforced soil zone) will contribute to the driving inertial forces. So the vertical distances, from the bottom of the wall, at which these weights act is needed to determine driving moments. In this Slope Case A, each of these portions of inertial force top slope weight, $W_{r\beta 1}$, $W'_{r\beta 2}$ and $W_{r\beta 3}$, act at the following distances respectively:

$$Y_{\beta 1} = H + \frac{h_s}{3} \qquad \text{[Eq. 9-65]}$$

$$Y'_{\beta 2} = H + \frac{h_s}{2} \qquad \text{[Eq. 9-66]}$$

$$Y_{\beta 3} = H + \frac{2}{3} h_s \qquad \text{[Eq. 9-67]}$$

For Slope Case B: $h_s \geq h'$ **-** broken slope crests beyond 0.5*H* wide mass or an infinite slope

$$W'_{\beta} = \frac{(0.5H - W_u) h'}{2} \gamma_i \qquad \text{[Eq. 9-68]}$$

For this Slope Case B, this slope weight inertial force, W'_{β} acts at

$$Y'_{\beta} = H + \frac{h'}{3} \qquad \text{[Eq. 9-69]}$$

9.8.1.3: Base Sliding

The resistance to sliding in seismic R_{swdyn} parallels Equations 7-32A-C and is the combination of the static sliding resistance R_s and the resistance due to the vertical component of half the dynamic earth force increment. So for the calculations below the only new term compared to static equations is $0.5\Delta P_{dynV}$:

If the reinforced (infill) soil controls:

$$R_{swdyn} = C_{ds} \left[q_d L_{\beta} + W_{ri} + W_{r\beta} + (P_{sV} + P_{qdV} + (0.5\Delta P_{dynV})) \right] \tan \phi_i \qquad \text{[Eq. 9-70A]}$$

If the gravel fill controls:

$$R_{swdyn} = C_{ds} \left[q_d L_{\beta} + W_{ri} + W_{r\beta} + (P_{sV} + P_{qdV} + (0.5\Delta P_{dynV})) \right] \tan \phi_d \qquad \text{[Eq. 9-70B]}$$

If the foundation soil controls:

$$R_{swdyn} = C_{ds} [c_f L + (q_d L_{\beta} + W_{ri} + W_{r\beta} + (P_{sV} + P_{qdV} + (0.5\Delta P_{dynV}))) \tan \phi_f] \qquad \text{[Eq. 9-70C]}$$

As stated in Section 7, the quantity C_{ds} is the coefficient of direct sliding and cannot exceed unity. For soil to soil interfaces the value for this parameter can be assumed to be equal to one. For the case of a geosynthetic layer placed at the base of the reinforced soil zone, $C_{ds} < 1$ may be appropriate.

The same restrictions on offset dead loads described in static Section apply for the above equations. Some, or all, of the contribution of dead loads to resisting forces may be removed depending on offset of the dead load, as shown in Equations 7-28 and 7-29.

The total driving seismic load for sliding is the combination of the external inertial forces (P_{IR}) and total seismic earth forces for external analysis (P_{aEHext}).

The Factor of Safety against base sliding at the bottom of the reinforced mass can be expressed as:

$$FS_{slseismic} = \frac{R_{swdyn}}{P_{IR} + P_{sH} + P_{qdH} + (0.5\Delta P_{dynH})} \qquad \text{[Eq. 9-71]}$$

The calculated value of $FS_{slseismic}$ should not be less than 1.1 (Table 5-2).

9.8.1.4: Overturning

The resistance to overturning in seismic is $M_{rseismic}$ is the combination of the static overturning resistance (M_r) and the resistance due to the vertical component of half the dynamic earth force increment:

The resisting moment is calculated as:

$$M_{rseismic} = M_r + 0.5\Delta P_{dynV}\left[L + \frac{H_{ext}}{2}\tan\omega\right] \qquad \text{[Eq. 9-72]}$$

where M_r is the static resisting moment from Equation 7-34A and B and the horizontal moment arm for the dynamic force $0.5\Delta P_{dynV}$: can also be expressed as the term for the moment arm for vertical component of surcharge load, defined as X_q in Equation 7-25.

The same restrictions on offset dead loads described in static Section 7 apply for the above equations: some, or all, of the contribution of dead loads to resisting forces may be removed depending on offset of the dead load, as shown in Equations 7-28 and 7-29.

The driving moment is calculated as:

$$M_{Oseismic} = P_{sH}Y_s + P_{qdH}Y_q + 0.5\Delta P_{dynH}Y_q + P_{IR}h_{IR} \qquad \text{[Eq. 9-73]}$$

The driving moment arms for static earth forces (Y_s and Y_q) are defined in Equations 7-18 and 7-19 and the dynamic earth force component acts at the same location as the surcharge.

The total inertial load (P_{IR}) acts a moment arm (h_{IR}) for all the components of the inertial weight: the wall face, the reduced-width reinforced mass, and the reduced-width top slope soil. Depending on the slope case, the top slope soil can have several different moment arms, as described in Section 9.8.1.2, so the total driving moment due to the inertial top slope weight (M_β) must be determined for proper case:

For slope case A: $h_s < h'$ (broken slope crests before back of $0.5H$ reduced width mass)

$$M'_{\beta} = W_{r\beta 1} Y_{\beta 1} + W'_{r\beta 2} Y_{\beta 2} + W_{r\beta 3} Y_{\beta 3} \qquad \text{[Eq. 9-74A]}$$

For Slope Case B: $h_s \leq h'$ **(**broken slope crests beyond 0.5H or an infinite slope)

$$M'_{\beta} = W'_{\beta} Y'_{\beta} \qquad \text{[Eq. 9-74B]}$$

The inertial slope weights and moment arms in Equation 9-74A and B are calculated per Equations 9-65 to 9-67 and 9-69, respectively.

The driving moment arm for the inertial forces measured at the normalized resultant is:

$$h_{IR} = \frac{k_{hext} W_w \frac{H}{2} + k_{hext} W'_i \frac{H}{2} + k_{hext} M'_{\beta}}{P_{IR}} \qquad \text{[Eq. 9-75]}$$

The factor of safety against overturning about the toe of the facing column can be expressed as the ratio of the resisting moment M_r and driving moment M_o:

$$FS_{otseismic} = \frac{M_{rseismic}}{M_{oseismic}} \qquad \text{[Eq. 9-76]}$$

The calculated value of $FS_{otseismic}$ should not be less than 1.1 (Table 5-2).

9.8.1.5: Bearing Pressure

The Meyerhof bearing capacity approach for statically loaded geosynthetic reinforced SRW structures (Section 7) is modified here to include the additional base loading eccentricity developed by the external dynamic force increment.

Consistent with the method used in Section 7, the eccentricity term $e_{seismic}$ can be calculated with respect to the center of the base of the reinforced zone (i.e. at distance $L/2$ from the toe of the wall) as follows:

$$e_{seismic} = \frac{L}{2} - \frac{M_{rseismic} - M_{oseismic}}{(W_{ri} + W_{r\beta} + q_d L_{\beta}) + (P_{sV} + P_{qdV} + 0.5\Delta P_{dynV})} \qquad \text{[Eq. 9-77]}$$

Quantity $B_{seismic}$ is the equivalent footing width at the base of the reinforced zone calculated as:

$$B_{seismic} = L - 2e_{seismic} \qquad \text{[Eq. 9-78]}$$

The applied bearing stress at the base of the reinforced zone is calculated as:

$$Q_{seismic} = \frac{(W_{ri} + W_{r\beta} + q_d L_{\beta}) + (P_{sV} + P_{qdV} + 0.5\Delta P_{dynV})}{B_{seismic}} \qquad \text{[Eq. 9-79]}$$

9.8.2: Internal Stability

For internal analysis, seismic loads include an inertial force, acting horizontally, that is a function of both the mass of segmental wall units and active soil wedge. For the purpose of this manual, the active soil wedge shall be determined based on Coulomb earth pressure theory. The dynamic earth force increment and inertial forces are in

addition to the static force. The orientation of the internal failure plane for seismic internal stability (active soil wedge) can be determined from Equation 7-50.

$$\alpha_i = \arctan\left[\frac{-\tan(\phi_i - \beta_{int}) + \sqrt{[\tan(\phi_i - \beta_{int}) \times (\tan(\phi_i - \beta_{int}) + \cot(\phi_i + \omega)) \times (1 + \tan(\delta_i - \omega) \times \cot(\phi_i + \omega))]}}{1 + \tan(\delta_i - \omega) \times (\tan(\phi_i - \beta_{int}) + \cot(\phi_i + \omega))}\right] + \phi_i$$

For internal stability analysis, the influence of ground acceleration on the orientation of the M-O failure plane is ignored.

The internal dynamic active earth pressure is defined as follows:

$$K_{aE\,\mathrm{int}} = \frac{\cos^2(\phi_i + \omega - \theta_{\mathrm{int}})}{\cos\theta_{\mathrm{int}} \cos^2\omega \cos(\delta_i - \omega + \theta_{\mathrm{int}})\left[1 + \sqrt{\frac{\sin(\phi_i + \delta_i)\sin(\phi_i - \beta_{\mathrm{int}} - \theta_{\mathrm{int}})}{\cos(\delta_i - \omega + \theta_{\mathrm{int}})\cos(\omega + \beta_{\mathrm{int}})}}\right]^2} \qquad \text{[Eq. 9-80]}$$

The specific form of equation Equation 9-9, for internal analysis, horizontal components the dynamic portion of the earth pressure coefficient is:

$$\Delta K_{dynH\,\mathrm{int}} = (K_{aE\,\mathrm{int}} - K_{a\,\mathrm{int}})\cos(\delta_i - \omega) \qquad \text{[Eq. 9-81]}$$

Where $K_{a\mathrm{int}}$ is static earth pressure coefficient from Equation 7-43.

Driving forces for internal seismic analysis are the static loads (excluding live load effects) plus the inertial forces and the dynamic earth forces (ΔP_{dynH}) over the height of the wall at the face (H). Note that unlike external analyses, the whole amount of ΔP_{dynH} (not half) is applied. The inertial forces used for internal analysis are those due to the wall face units.

So the dynamic earth force increment (ΔP_{dynH}) used for internal analysis is:

$$\Delta P_{dynH} = 0.5\Delta K_{dynH\,\mathrm{int}}\gamma_i H^2 \qquad \text{[Eq. 9-82]}$$

Total magnitude of this dynamic earth force increment is calculated from a triangular earth pressure, similar to static earth pressures from the soil. However, the dynamic earth force is distributed differently. For static earth forces from soils, the internal loads are applied as a proportion of the triangular earth pressure distribution, with larger soil forces lower in the wall. In contrast, the dynamic earth force is applied evenly over the height of the wall, similar to the distribution of earth forces from a surcharge load, as shown on Figure 9-6.

The amount of load on each geosynthetic layer is determined from the same contributory area $A_{c(n)}$ for each geogynthetic layer that is used for static calculations, as described in Section 7.5.2. The total seismic applied tensile force on each layer of geosynthetic ($F_{i(n)}$) is the horizontal component of the static earth forces (excluding live loads), the inertial forces, and the horizontal component of the dynamic earth force increment figured over that geosynthetic's contributory area. So for reinforcement layer *n,* the applied tensile force $F_{i(n)}$ is,

$$F_{i(n)} = k_{hint}\Delta W_{w(n)} + F_{gstat(n)} + F_{dyn(n)} \qquad \text{[Eq. 9-83]}$$

where:

$F_{gstat(n)}$ = applied tensile force on the geosynthetic due static earth forces of from soil and dead load surcharge, (same as static force on grid F_g in Section 7 but without live load surcharge effects) over contributory area for layer *n*.

$A_{c(n)}$ = contributory area to determine force in reinforcement,
D_n = depth to midpoint of contributory area, $A_{c(n)}$
$F_{gstat(n)}$ = static component of force in reinforcement at layer n
$F_{dyn(n)}$ = dynamic component of force in reinforcement at layer n
d_n = average depth of overburden over reinforcement anchorage length, $L_{a(n)}$
α_i = orientation of internal failure surface
$E_{(n)}$ = elevation of layer n above reference datum
$L_{a(n)}$ = anchorage length of layer n
AC_n = anchorage capacity of layer n
H = height
q_d = dead load surcharge
q_l = live load surcharge
σ_h = horizontal pressure
ω = wall inclination

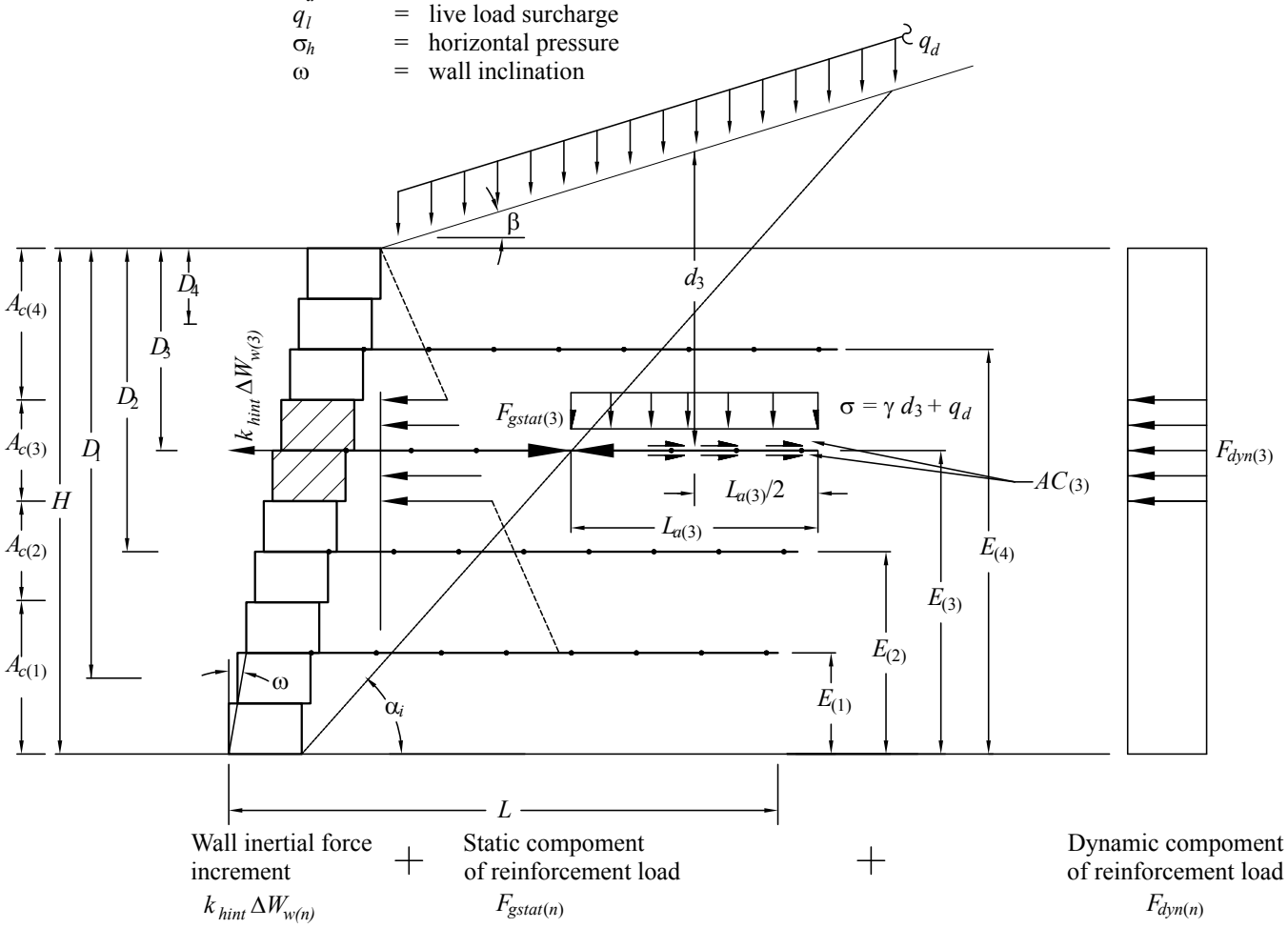

Note: $F_{g(1)}$, $F_{g(2)}$ and $F_{g(4)}$ are not shown, for clarity of $F_{g(3)}$.

Figure 9-6: Geometry and Forces Used to Calculate Reinforcement Loads and Anchorage Capacity

$$F_{gstat(n)} = [\gamma_i D_n + q_d] K_{aint} A_{c(n)} \cos(\delta_i - \omega) \qquad \text{[Eq. 9-84]}$$

$k_{hint}\Delta W_{w(n)}$ = wall inertial force increment due to the mass of segmental wall units over the contributory area for layer n.

$$\Delta W_{w(n)} = A_{c(n)} W_u \gamma_u \qquad \text{[Eq. 9-85]}$$

W_u = width of the segmental block unit.
γ_u = unit weight of the segmental block unit.
$A_{c(n)}$ = the contributory area for any reinforcement elevation (Equations 7-54 to 7-57).
$F_{dyn(n)}$ = dynamic earth force increment in the geosynthetic due to the dynamic earth force associated with the active wedge in the reinforced soil mass.

$$F_{dyn(n)} = 0.5\Delta K_{dynHint} A_{c(n)} \gamma_i H \qquad \text{[Eq. 9-86]}$$

(As stated above, the total dynamic earth force (ΔP_{dynH}) is distributed evenly over the height of the wall, so the load on each layer is that layers's contributory area worth of ΔP_{dynH}, uniformly distributed over the height of the wall.)

9.8.2.1 Tensile Overstress

The dynamic factor of safety against over-stressing of reinforcement layer *n* is given by:

$$FS_{toseismic(n)} = \frac{LTDS_{seismic(n)}}{F_{i(n)}} \qquad \text{[Eq. 9-87]}$$

A seismic event results in a short-term, nominally instantaneous load event. As such, the standard of practice for geosynthetic reinforcement design under seismic design conditions is to <u>not</u> consider the effect of creep (RF_{cr}) on the allowable design strength.

$$LTDS_{seismic(n)} = LTDS_{(n)} \times RF_{cr} \qquad \text{[Eq. 9-88]}$$

The calculated value of $FS_{toseismic(n)}$ should not be less than 1.1 (Table 5-2).

9.8.2.2: Pullout

The factor of safety against pullout failure is expressed as:

$$FS_{poseismic(n)} = \frac{AC_{(n)}}{F_{i(n)}} \qquad \text{[Eq. 9-89]}$$

where, from Section 7, Equation 7-63:

$$AC_{(n)} = 2L_{a(n)} C_i (d_{(n)} \gamma_i + q_d) \tan \phi_i$$

The calculated value of $FS_{poseismic(n)}$ should not be less than 1.1 (Table 5-2).

9.8.2.3: Internal Sliding

While internal sliding is part of internal analysis, internal sliding parallels external sliding calculations, including applying one-half of the dynamic earth forces ΔP_{dyn}. The seismic internal sliding potential should be evaluated at each reinforcement layer.

As done in static analysis, the "external" load for seismic internal sliding is calculated over the height to the geogrid layer elevation ($H_{ext} - E_{(n)}$) (see Figure 9-7). Therefore the vertical and horizontal dynamic earth forces at each reinforcement layer $\Delta P_{dynH(n)}$ and $\Delta P_{dynV(n)}$ are calculated in a manner paralleling external dynamic earth forces:

$$\Delta P_{dynH(n)} = 0.5\Delta K_{dynH}\gamma_r(H_{ext} - E_{(n)})^2 \qquad \text{[Eq. 9-90]}$$

$$\Delta P_{dynV(n)} = 0.5\Delta K_{dynV}\gamma_r(H_{ext} - E_{(n)})^2 \qquad \text{[Eq. 9-91]}$$

Resistance to seismic internal sliding (R'_{swdyn}) parallels the external seismic sliding R_{swdyn}, Equation 9-70A-C, but calculates each of the variables at the elevation of the nth layer, as done in static internal sliding.

$$R'_{swdyn} = C_{ds}\left[W'_{r(n)} + W_\beta + q_d L_\beta + \left[P_{sV(n)} + P_{qdV(n)} + (0.5\Delta P_{dynV})_{(n)}\right]\right]\tan\phi_r + V_{u(n)} \qquad \text{[Eq. 9-92]}$$

where

$W'_{r(n)}$, W_β, $q_d L_\beta$, $P_{sV(n)}$, $P_{qdV(n)}$, and $V_{u(n)}$ are the same static vertical loads at layer n as presented in Section 7.5.5.2 and $\Delta P_{dynV(n)}$ at layer n is defined above in Equation 9-91.

The driving forces at each layer for seismic internal sliding include the static loads (excluding live load) $P_{sH(n)}$ and ($P_{qdH(n)}$) defined in Section 7.5.5.1, one-half the horizontal dynamic earth force increment ($\Delta P_{dynH(n)}$) and the inertial forces from the wall system.

The weights used in the inertial calculation include the reduced-width reinforced zone ($\Delta W'_{i(n)}$) and the slope above this (W'_β) and wall face unit weights ($\Delta W_{w(n)}$) over the height of the reinforcement layer *n*. So the inertial force for internal sliding ($\Delta P_{IR(n)}$) is calculated:

$$\Delta P_{IR(n)} = k_{hext}(\Delta W_{w(n)} + \Delta W'_{i(n)} + W'_\beta) \qquad \text{[Eq. 9-93]}$$

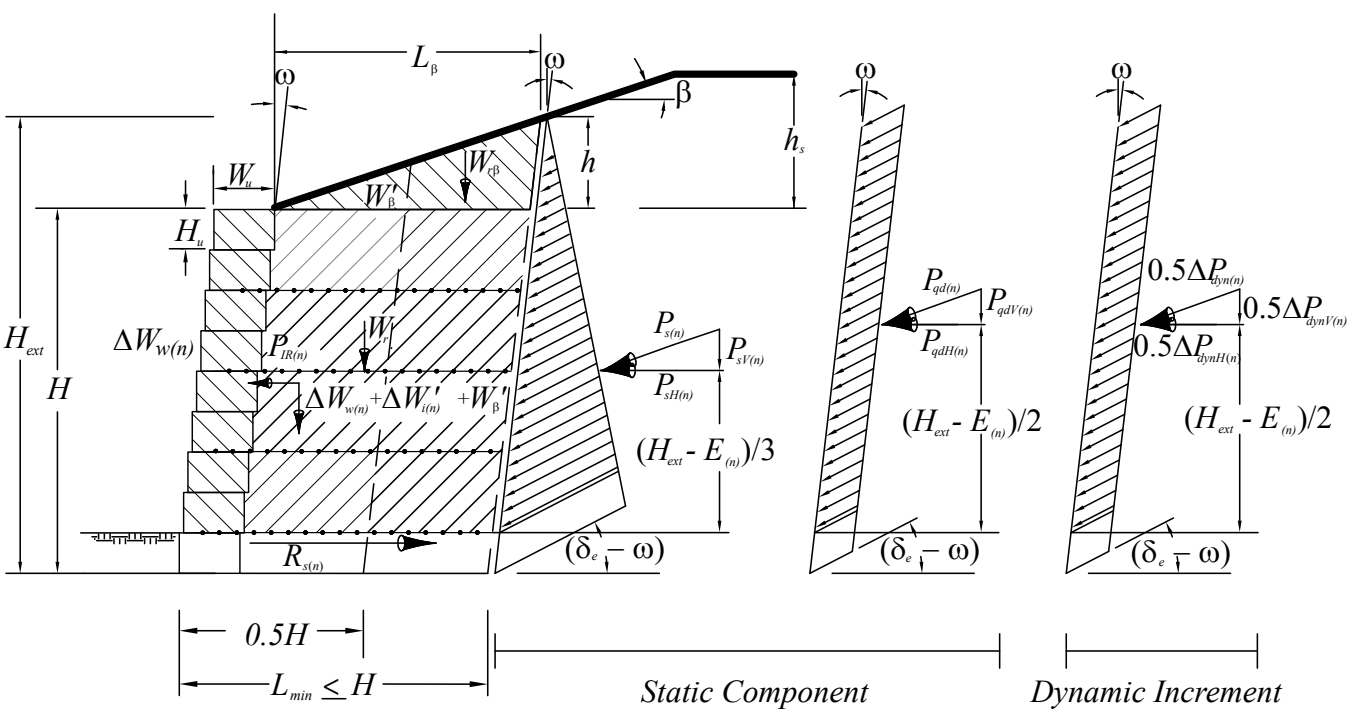

Figure 9-7: Geometry and Forces used to Calculate Internal Sliding of Reinforcement Layers

where,

$$\Delta W_{w(n)} = \gamma_u (H_{ext} - E_{(n)}) W_u \qquad \text{[Eq. 9-94]}$$

$$\Delta W'_i = (0.5H - W_u)(H_{ext} - E_{(n)})\gamma_i \qquad \text{[Eq. 9-95]}$$

and W'_β varies with top slope geometry and is calculated per Equations 9-63 to 9-68 in Section 9.8.1.2.

The factor of safety against internal sliding along a reinforcement layer located at a given depth below the crest of the wall can be expressed as:

$$FS_{slseismic(n)} = \frac{R'_{s_seismic(n)}}{P_{sH(n)} + P_{qdH(n)} + 0.5\Delta P_{dynH(n)} + \Delta P_{IR(n)}} \qquad \text{[Eq. 9-96]}$$

The calculated value of $FS_{slseismic(n)}$ should not be less than 1.1 (Table 5-2).

9.8.2.4 Connection Capacity

The dynamic factor of safety against over-stressing of reinforcement layer *n* is given by:

$$FS_{conseismic(n)} = \frac{T_{conn(n)}}{F_{i(n)}} \qquad \text{[Eq. 9-97]}$$

The calculated value of $FS_{conseismic(n)}$ should not be less than 1.1 (Table 5-2).

9.8.2.5: Crest Toppling

Local (crest) toppling refers to the overturning of the top unreinforced portion of the facing column. The critical portion of the facing column is taken as the height of wall starting at the elevation of the topmost layer of reinforcement. The calculations presented in parallel external stability calculations for overturning of an unreinfroced conventional wall Section 9.7 done at each unit height increment, to a height of depth *z* to the unit interface, from the top of wall face.

The dynamic earth force increments at each unit height are calculated in manner similar to conventional wall Equations 9-30 and 9-35 but the internal values for ΔK_{dyn} and γ are used:

$$\Delta P_{dynH(z)} = 0.5\Delta K_{dynH}\gamma_i z^2 \qquad \text{[Eq. 9-98]}$$

$$\Delta P_{dynV(z)} = 0.5\Delta K_{dynV}\gamma_i z^2 \qquad \text{[Eq. 9-99]}$$

The static terms $P_{sH(z)}$, $P_{sV(z)}$, $P_{qdH(z)}$ and $P_{qdV(z)}$ are calculated per Equations 7-82, 7-84 and 7-86.

The resisting moment from the wall units and the vertical components of static and dynamic earth forces as calculated at each unit height:

$$M_{rseismic(z)} = W_{w(z)}X_{w(z)} + P_{sV(z)}\left(W_u + \left(\frac{z}{3}\right)\tan\omega\right) + \left[(P_{qdV(z)} + 0.5\Delta P_{dynV(z)})\left(W_u + \left(\frac{z}{2}\right)\tan\omega\right)\right] \qquad \text{[Eq. 9-100]}$$

where $X_{w(z)}$ is the horizontal distance from the toe of the internal sliding surface to the center of gravity of the facing column at depth z calculated per Equation 7-90, $W_{w(z)}$ is the weight of unit above z.

The overturning (driving) moment is due to inertial force of the wall units, and horizontal static and dynamic earth forces. Because the calculations are mirroring external unreinforced wall analysis, one-half of the dynamic earth force is applied. The overturning moment is calculated as:

$$M_{oseismic(z)} = k_{h\text{int}} W_{w(z)} \left(\frac{z}{2}\right) + P_{sH(z)} \left(\frac{z}{3}\right) + P_{qdH(z)} \left(\frac{z}{2}\right) + 0.5\Delta P_{dynH(z)} \left(\frac{z}{2}\right) \qquad \text{[Eq. 9-101]}$$

The factor of safety $FS_{ctseismic(z)}$ against crest toppling about the toe of the facing column at depth z below the crest of the wall can be expressed as the ratio of the resisting moment $M_{r(z)seismic}$ and driving moment $M_{oseismic(z)}$:

$$FS_{ctseismic(z)} = \frac{M_{r\,seismic(z)}}{M_{o\,seismic(z)}} \qquad \text{[Eq. 9-102]}$$

The calculated value of $FS_{ctseismic(z)}$ should not be less than 1.1 (Table 5-2).

9.8.3: Internal Compound Stability (see Section 8)

The consideration of seismic load for internal compound stability calculations is based on the addition of an inertial force ($k_h W$) associated with the mass of the soil slice (see Figure 9-8).

The incorporation of an additional dynamic load or inertial force in Equation 8-6 is calculated as follows:

$$FS = \frac{\sum \dfrac{(W+P)\tan\phi}{\cos\alpha + (\sin\alpha\tan\phi)/FS} + \sum (T_{available}\cos\alpha) + F_{available}}{\sum (W+P)\sin\alpha + \sum k_h W \dfrac{d_i}{R}} \qquad \text{[Eq. 9-103]}$$

where k_h is defined in Equation 9-23.

The sketch in Figure 9-9 illustrates the force components as well as their respective moment arms. Note that for the dynamic component, the moment arm is the perpendicular distance to the center of the slip circle, whereas the other components' moment arm is the radius of the slip circle.

Note that the summation $\sum k_h W \dfrac{d_i}{R}$ is performed for all slices.

Comment: Version 4.0 of the SRWall Software carries out Internal Compound Stability (ICS) as described above. The terminology used in the reports from the software however, does not match the one presented above. The following relationship should be helpful in matching the terms used in the software:

$\sum DynF$ *in the software refers to* $\sum k_h W \dfrac{d_i}{R}$

Note that in the software, the $\dfrac{d_i}{R}$ *term is conservatively equal to* 1.0.

The calculated value of FS_{ICS} should not be less than 1.1 (Table 5-2).

Equibrium of forces in the vertical direction:
$N \cos \alpha + S \sin \alpha - (W + P) = 0$

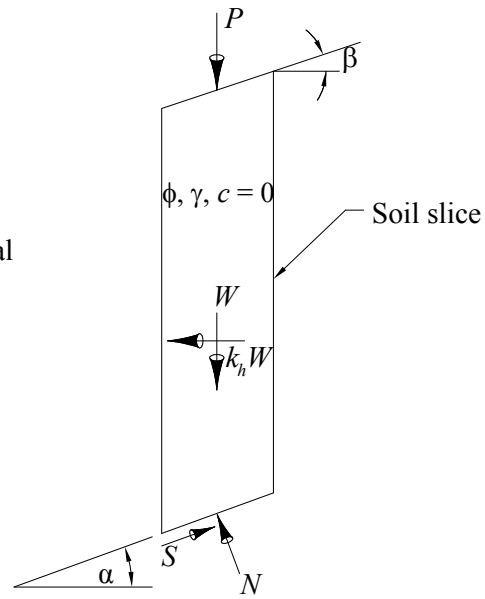

Figure 9-8: Soil Slice Showing Dynamic Load

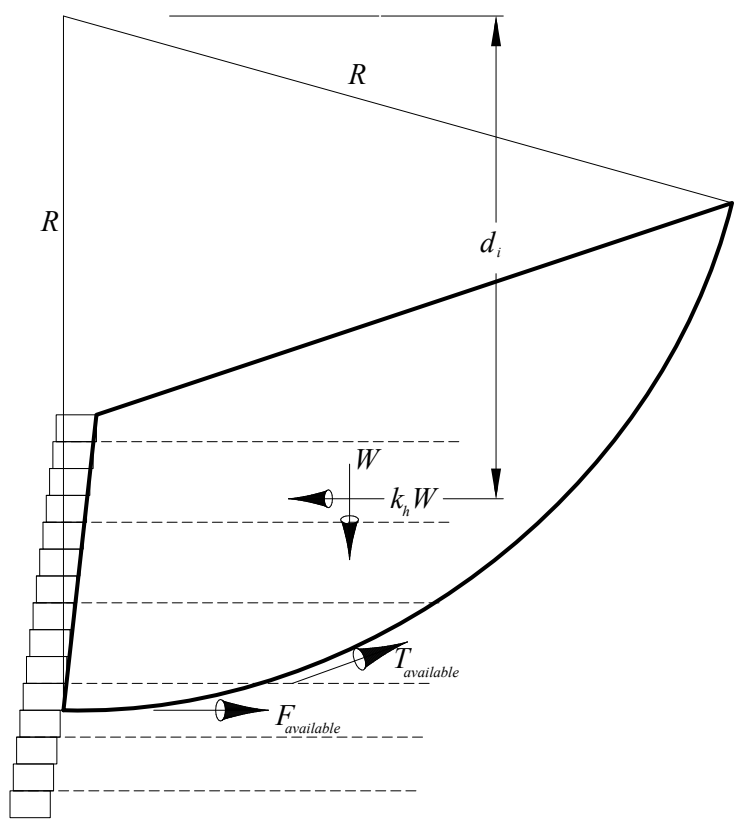

Figure 9-9: Components of ICS Analysis Including Dynamic Load

Section 9.9: Example Calculations

An example calculation using this design methodology to analyze a typical design problem for a generic reinforced soil SRW is presented. The example calculation serves to illustrate many of the consequences of certain design property assumptions and important intermediate calculation steps.

SECTION 10
DRAINAGE DESIGN AND WATER CONSIDERATIONS

Water can increase loads on a retaining wall, be a source of scour or erosion, or decrease stability of soils surrounding a SRW. As a general design approach, it is considered preferable, whenever possible, to keep water away from retaining walls and provide adequate drainage structures in and around walls to avoid build-up of hydrostatic pressure on walls. This section presents an overview of wall drainage issues as well as internal wall drainage design guidelines for SRW engineers. Section 11 and Section 12 present design guidelines for drainage and water issues, involving SRWs, for site civil engineers and geotechnical engineers, respectively.

Section 10.1: Overview of Water Considerations

A brief overview of some of the effects of water on walls that should be considered by design professionals are:

- **Surface Water**—Improper collection and flow of surface drainage can direct excessive amounts of water towards a SRW and cause erosion or over-loading of the wall. Section 11 discusses considerations for site civil engineer to minimize surface water issues around a SRW.
- **Groundwater/Subsurface Water**—Groundwater can weaken foundations soils supporting a wall and can increase external loads on a wall. See discussion later in this Section and in Section 12 for subsurface water considerations for the SRW design engineer and geotechnical engineer.
- **Water Bodies in Front of Walls**—SRWs along a body of water such as a lake shoreline, river or stream channel, or detention/retention ponds present several special considerations including rapid draw down pressures, scour, fines migration, foundation concerns, and ice. See later discussion in the Section 10.5 as well as Sections 11 and 12 for discussion of wall design and civil design for around SRWs when standing water will be present in front of a wall and geotechnical concerns for walls with submerged foundations.
- **Drainage within and Around Walls—**Whenever practical, SRWs should be designed with sufficient drainage materials, such as gravel fill, drainage pipe, and filter fabric, in and around the walls, to avoid hydrostatic pressures on the SRW as discussed later in this section.

Potential sources of subsurface water are groundwater, surface water infiltration, and a body of water in front of the wall as illustrated in Figure 10-1. Groundwater may be present at an elevation above the bottom of the wall and would flow to the SRW from an excavation backcut; or it may be present beneath the bottom of the SRW. A groundwater surface beneath an SRW may rise into the SRW structure, depending on the hydrogeology of the site. Surface water, due to direct precipitation above the wall, or surface drainage directed towards wall, may infiltrate into the SRW from above. A river, channel, stream, lake, or pond can also introduce water from the front of the wall through the mortarless wall face.

It is preferable to engineer a retaining wall with proper drainage in and around the wall to avoid water reaching the wall and to avoid hydrostatic pressure building up behind or within the wall rather than allowing water loads and designing for the hydrostatic pressure and erosion energy of the water. To this end, Section 10.3 and Section 11 discusses processes to mitigate surface drainage on a SRW. However, even with the best water mitigation plans around a wall, some water may reach the wall system due to some of the following: a body of water in front of the wall, a high groundwater table at the wall location, or some surface infiltration from precipitation directly above the wall. Proper design of drainage systems in and directly around a wall is needed to ensure such water reaching a wall does not build-up into hydrostatic pressures on the wall.

Section 10.2: SRW Drainage Components

The basic drainage features were introduced in Section 2.3. In the following subsections, these features will be described in detail.

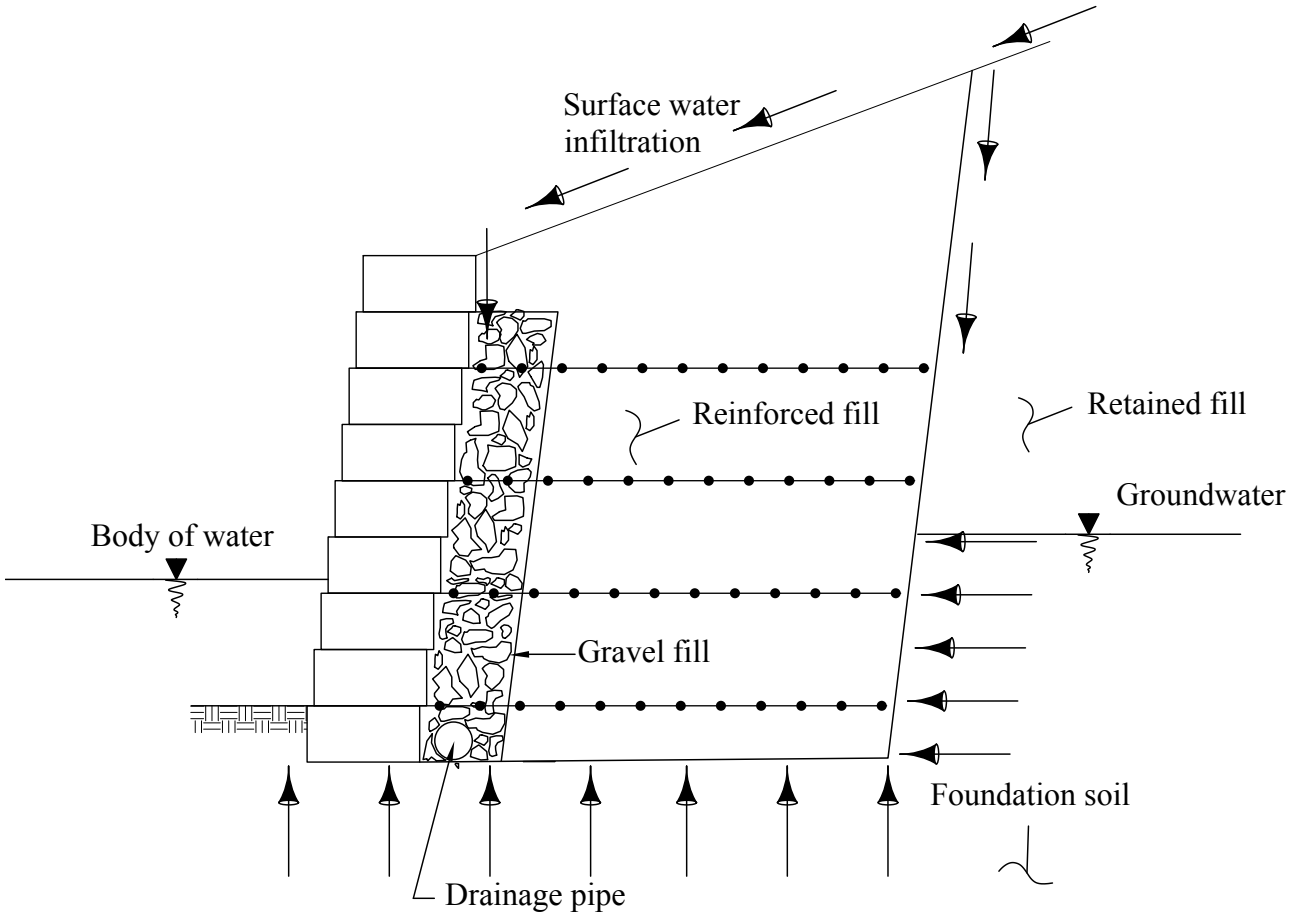

Figure 10-1: Gravel Fill (Drainage Aggregate)

10.2.1 Gravel Fill (Drainage Aggregate)

Engineered gravel fill (referred to as drainage aggregate in previous editions of this manual) (Figure 10-1) is an important part of a properly designed SRW. Gravel fill is generally open graded gravel (i.e., *GP*). In many cases the gravel fill (drainage aggregate) is separated from the reinforced fill soils by a geotextile and contains a drainage pipe to direct accumulated water away from the structure. The minimum recommended thickness of the gravel fill placed behind SRW units is 12 in. (305 mm). A properly designed gravel system directly behind the SRW units will do the following:

- Facilitates compaction of fill directly behind the SRW units
- Prevents the build up of hydrostatic pressures behind the face of the wall.
- Prevents retained soils from washing through the face of the wall.

The National Concrete Masonry Association recommends the use of gravel fill behind the SRW units, except when free draining (less than 5% passing the 200 sieve) reinforced fill is used to construct the wall. In this case, a geotextile may be necessary to prevent soil particles from passing through the wall face. Even if the wall backfill is a free draining material, the cores in the SRW units and the annulus between the units must be filled with gravel. The design of the gravel fill is discussed in detail in Section 10.4.1.

10.2.2: Drain Pipe

A drain (collector) pipe (Figures 10-1 to 10-4) is often included in the internal drainage system for an SRW. The function of this pipe is to remove water from the gravel fill so that water does not accumulate in the gravel and

increase the internal forces on the SRW. If the anticipated rate of infiltration of water into the gravel is greater than the rate that the water may dissipate through the face of the wall, then a drain pipe with weep holes and frequent outlet pipes is generally recommended. The design of the drainage system may include both solid and perforated pipe. The solid pipe is used when transporting water and the perforated pipe is used when collecting and transporting water.

10.2.3 Filters (Geotextile or Gravel)

A properly designed and constructed SRW structure should minimize the amount of water that drains through the soil and moves into the gravel fill behind the wall. When provisions have been built into the design to only allow

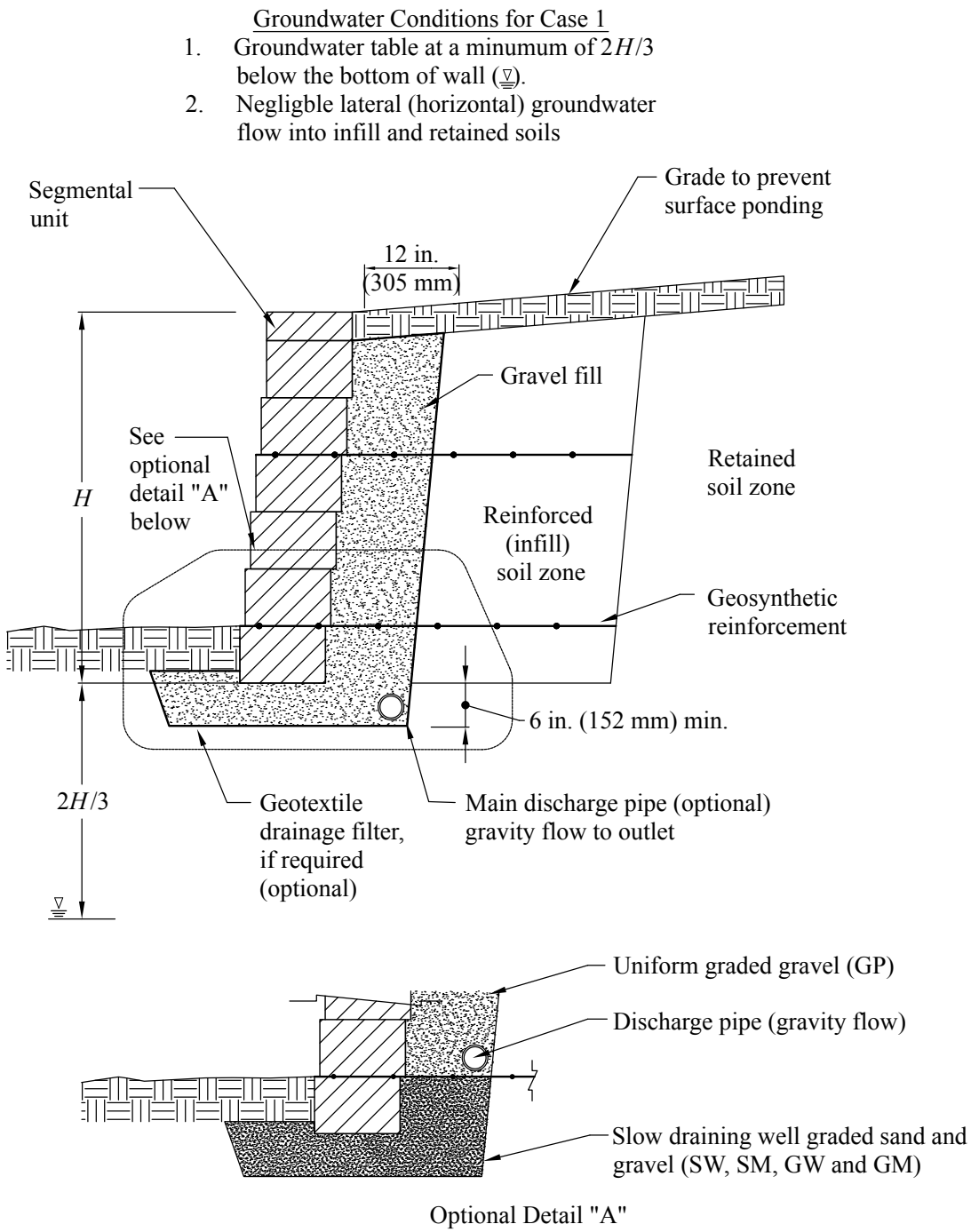

Figure 10-2: Wall Face Drain–Case 1

incidental water to migrate to the gravel fill zone, a geotextile filter is not required and generally not needed. For SRW designs that do not fit this description, a filter may be needed to minimize fines migration and soil piping while still allowing unimpeded water flow. A shoreline wall subject to a regularly fluctuating water level in front of the wall is an example of a wall that might need such a filter. The gravel fill may be designed to act as a filter for the reinforced fill or a geotextile filter may be specified. The geotextile should allow for a high rate of drainage through the geotextile. The design of soil and geotextile filters are covered in Section 10.4.1 and 10.4.2.

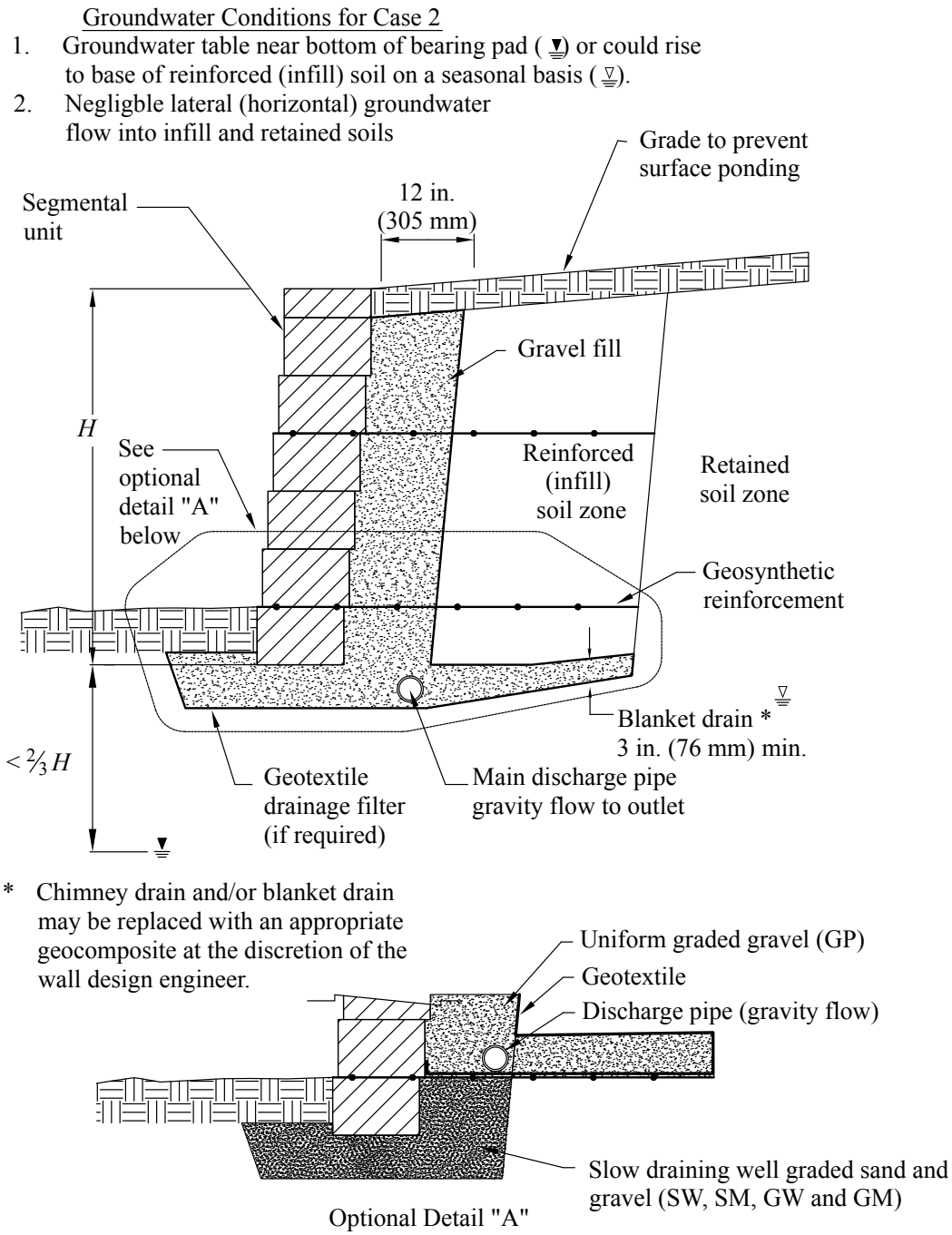

Figure 10-3: Wall Face and Blanket Drain–Case 2

10.2.4: Blanket Drain

A blanket drain below the reinforced soil zone (Figures 10-3 and 10-4) is recommended when the groundwater table is expected to rise to, or remains just below, the leveling pad elevation during the design life of the structure. The blanket is typically open-graded gravel fill wrapped in a geotextile. The design considerations that should be including when incorporating a blanket drain into an SRW are covered in detail in Section 10.4.2.

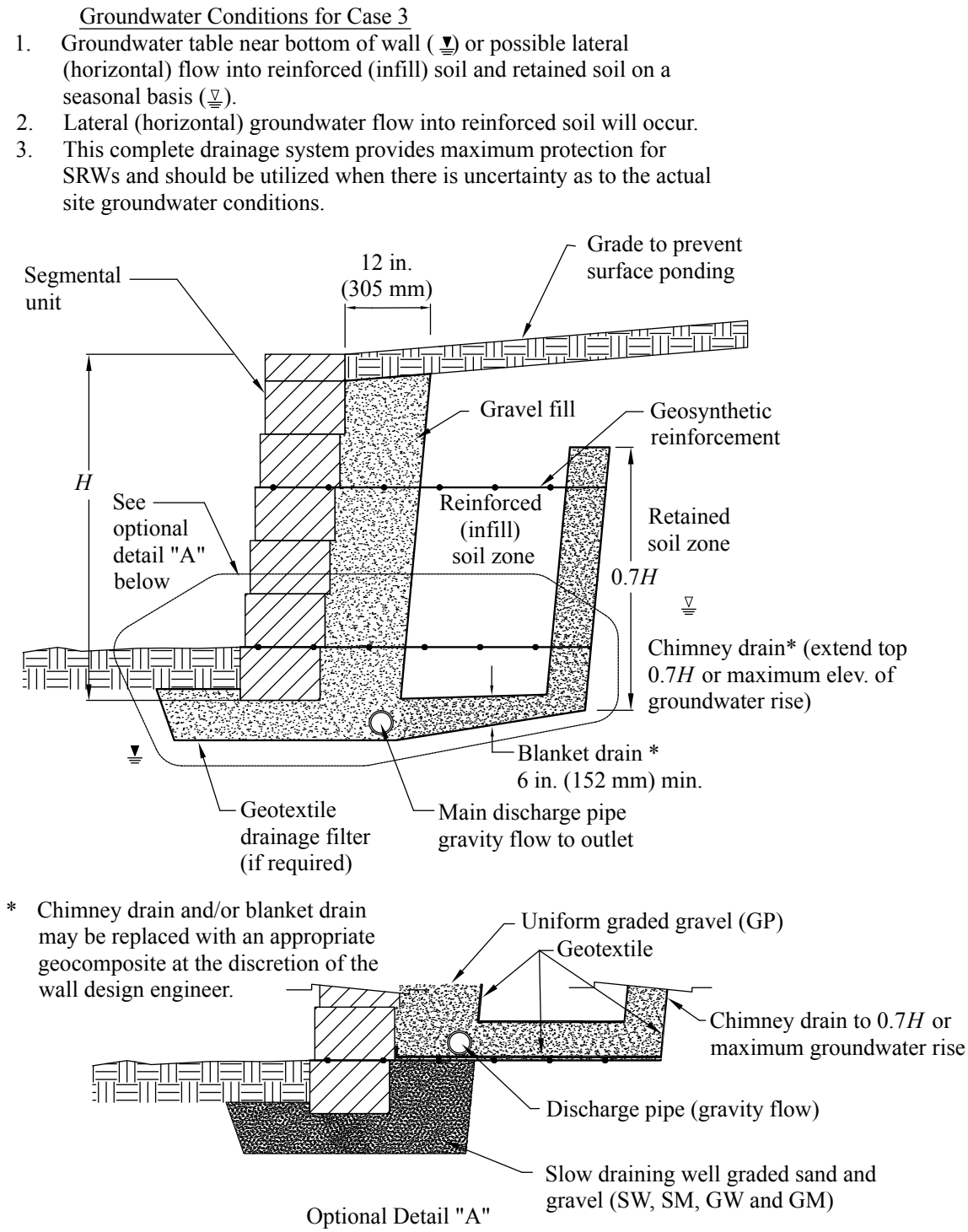

Figure 10-4: Complete Drainage System–Case 3

10.2.5: Chimney Drain

When the groundwater table is expected to rise above the bottom of the leveling pad, or when perched water is present in a cut bank behind the reinforcement, a chimney drain should be included as part of the drainage system, (Figure 10-4). The chimney drain should extend to an elevation in excess of the maximum anticipated groundwater elevation behind the structure or approximately 0.7*H*, whichever is greater. A prefabricated drainage composite may be utilized as the chimney drain. Details on the design and specification of chimney drains may be found in Section 10.4.

The drainage systems described above must have adequate thickness and permeability to carry anticipated flows and be constructed with an appropriate gradient. All drainage pipes should have adequate flow capacity and gradient to direct intercepted flows by gravity to locations beyond the SRW structure. In most cases the gravel fill should be encapsulated by an appropriately selected geotextile filter to prevent ingress of finer soils that may clog the coarser-sized gravel fill materials over time. External stability calculations should include analyses of potential sliding along geotextile or geocomposite interfaces, as applicable.

10.2.6: Drainage Swale

Surface water control is a critical component of an SRW design. While most surface drainage issues are addressed by the site civil engineer in their grading, drainage and erosion control plans, the SRW design engineer can incorporate some features in the wall details to help control surface drainage in the immediate vicinity of the wall. Whenever possible, it is recommended that surface water be diverted away from the SRW. This, however, is not always possible. A curb and gutter may be used to direct water away from the wall face. When the grade above the top of the wall slopes, the use of a drainage swale has also been used to reduce the potential for surface water from overtopping the wall.

A drainage swale is a man-made depression in the ground surface used to intercept surface water and direct it in a controlled manner. Figure 10-5 shows two typical drainage swale details, one for a vegetated swale and the other detail is for a concrete or asphalt lined swale. Vegetated swales provide a very aesthetically pleasing appearance, however, the effectiveness of the low permeability soil in preventing water from migrating into the reinforced soil mass and gravel fill should be evaluated. Shrinkage cracks in the low permeability soil during periods of extended dry weather may increase the permeability of the layer to the extent that it is no longer an effective barrier layer. When the potential for this to occur exists, a geomembrane (an impermeable geosynthetic which is typically used to control fluid migration) should be included. Concrete or asphalt lined swales may also crack with wall movement or significant changes in temperature and will likely need to be maintained during the life of the wall to maintain their effectiveness.

Section 10.3: Subsurface Drainage Capacity Design

Three zones of subsurface, or internal, drainage are summarized in Section 10.2. The three zones are: directly behind the SRW units; at the back of the reinforced soil zone; and at the subgrade and reinforced soil mass interface (i.e., a blanket drain). Drainage design for these three zones is discussed below. Flow into the system, flow within and out of the system, and details are addressed for each zone.

10.3.1: Drains Directly Behind the SRW Units

10.3.1.1: Reinforced Soil Walls

Although its primary functions are as core fill and as a compaction aid, the gravel fill directly in, between, and behind SRW units will function as a drain. Its primary function for reinforced soil walls, however, is drainage

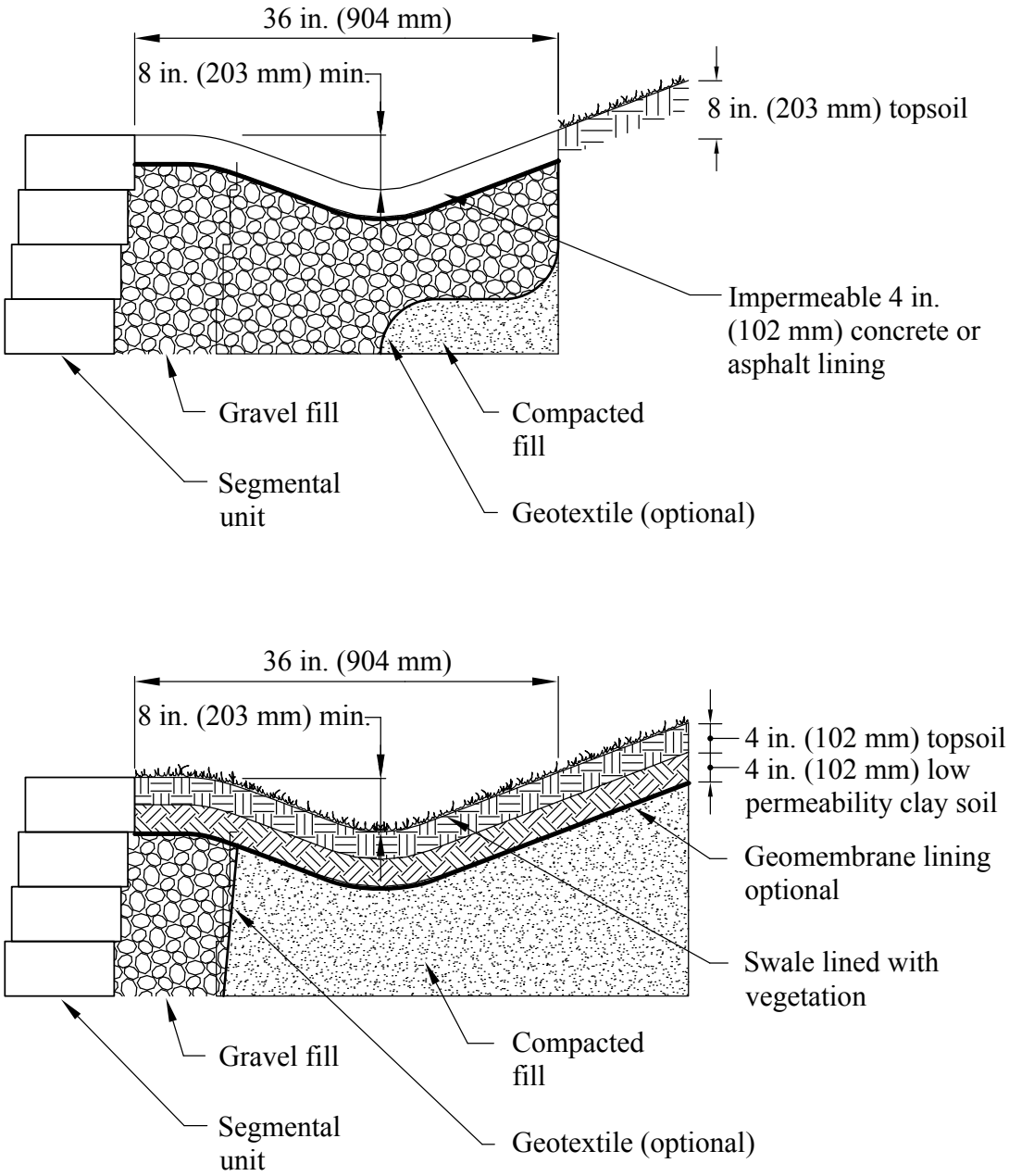

Figure 10-5: Drainage Swale Details

of errant surface water that infiltrates the wall immediately behind the SRW units. Infiltration of surface water should be minimized by wall construction design details and grading and drainage design by the site civil engineer. Therefore, water flow into, within and out of the system is not readily calculated. Standard details of drain width, gravel fill gradation, collection pipes and outlets are normally used. The gravel fill should not be designed as a primary drain for surface water runoff. Details should eliminate or minimize the amount of surface water that flows into the gravel fill.

10.3.1.2: Gravity Walls

The gravel fill directly behind SRW units serves both to drain infiltrating surface water and to drain the retained backfill of the gravity walls. Flow design of this drain should follow guidelines discussed in Section 10.3.2 where groundwater, and therefore subsurface flow from the retained backfill to this drain, is anticipated. The width of the drain should be equal to or greater than the active soil wedge where groundwater is anticipated. Standard width of gravel fill column may be used where groundwater is not anticipated and consequences of failure are minor.

10.3.2: Drain at the Back of Reinforced Soil Zone

The purpose of this feature is to adequately drain any subsurface water flow such that the draw down seepage forces acting on the back of the reinforced mass are negligible, or controlled. When forces are present, this driving force must be accounted for in the external stability analysis.

10.3.2.1: Flow into the System

Anticipated flow into the drain system may be estimated using Darcy's Law (see standard textbooks for assumptions and limitations). Flow is equal to:

$$q_f = k\, i\, A_f \qquad \text{[Eq. 10-1]}$$

where:

q_f = infiltration rate
k = effectively permeability of retained backfill soil
i = average hydraulic gradient in retained backfill soil
A_f = area of soil normal to the direction of flow

Conventional flow net analysis can be used to calculate the hydraulic gradient.

Some drains consist of gravel fill surrounding a perforated pipe. Flow into the gravel fill may be calculated with Equation 10-1. Flow from the gravel fill into the pipe is through the circular or slot perforations. Perforated, corrugated HDPE pipe is manufactured with minimum inlet openings of approximately 1 square in. per 1 ft length (20 cm^2 per meter length) for standard pipe (AASHTO M 252 [Ref. 104]). Standard pipe is generally adequate for most subsurface drainage applications. Hole diameter or slot width must be checked relative to the size of the surrounding gravel fill, to ensure soil retention. For slots, Equation 10-2A may be used to check retention and Equation 10-2B for circular perforations:

$$\frac{D_{85}}{slot\ width} > 1.2 \text{ to } 1.4 \qquad \text{[Eq. 10-2A]}$$

$$\frac{85\%\ size\ of\ drain\ fill}{hole\ diameter} > 1.0 \qquad \text{[Eq. 10-2B]}$$

10.3.2.2: Flow in the Drain

Flow capacity within soil drains can be estimated with Equation 10-1, using k and i for the soil drain material.

Flow capacity within geocomposite drains can be calculated with Darcy's Law. Flow per unit width of a geocomposite drain is equal to:

$$q_f = 2\, i\, B \qquad \text{[Eq. 10-3]}$$

where:

q_f = flow rate
2 = transmissivity constant for a geocomposite drain
i = hydraulic gradient in drain
B = width of geocomposite drain

The geocomposite transmissivity should be evaluated with an appropriate laboratory model test. Product long-term transmissivity should be quantified at anticipated (or greater) design pressure and over time to evaluate potential decrease of flow capacity due to creep (i.e., creep of geotextile into flow channel).

Flow capacity within drain pipes, flowing full, can be computed with the Manning's equation (see standard textbooks for assumptions and limitations). Flow is equal to:

$$q = \frac{0.463}{n} d^{8/3} s^{1/2} \qquad \text{[Eq. 10-4]}$$

where:

q = flow rate, cfs (m^3/s)
n = roughness coefficient, or Manning's value
d = diameter of pipe, ft (m)
s = slope of energy grade line ft per ft (m per m)

10.3.2.3: Outlets

Collection and outlet pipes are often used with the column of gravel fill directly behind the SRW units and with the drain at the back of the reinforced soil mass. Pipes are generally laid at required slopes, with a minimum of 2% for constructability and to ensure positive flow. Outlets are generally spaced at 20 to 50 ft (6.1 to 15.2 m) maximum lateral spacing.

10.3.3: Drain at Subgrade and Reinforced Soil Mass Interface

A blanket drain at the interface between subgrade and the reinforced soil mass is recommended for high groundwater table conditions. Flow into this drain may be computed with Equation 10-1. Flow through the blanket drain may be computed with the applicable equation presented in Section 10.3.2.2.

Section 10.4: Filtration and Permeability

An SRW consists of several soil zones. Groundwater flow from one zone to another, and then to a drain and outlet feature, should be unimpeded. If impeded, water will backup at the interface of the two adjacent zones increasing hydrostatic pressures and significantly decreasing the stability of the wall structure.

Soil filtration and permeability requirements must be met between each interface of two adjacent zones of (different) soils to prevent impeded flow and prevent soil piping into an adjacent zone. The requirements for soil-to-soil contact are presented in Section 10.4.1. In some cases, a geotextile filter is used at the interface of the two soil zones. Geotextile requirements are presented in Section 10.4.2.

10.4.1: Soil Filtration

As water flows from one soil zone to another, the downstream soil must meet filter criteria to prevent piping of the upstream soil. Furthermore, the downstream soil must have adequate permeability (i.e., flow capacity to discharge

the water) relative to the adjacent, upstream soil. The filter (downstream) soil must have the correct gradation to function properly as a filter; these gradation requirements are also a function of the upstream soil gradation.

Design criteria for soil filters are summarized below and are based upon gradations of the two adjacent soils. These criteria are applicable to adjacent soils with gradation curves that are approximately parallel. The equations are not applicable to gap-graded soils, soil-rock mixtures, non steady-state flow, and soils with gradation curves that are not approximately parallel. When criteria are not applicable, filter design should be based upon laboratory filtration tests.

Design flow capacity cannot be realized if the upstream soil pipes into the (downstream) filter soil. The pore sizes in the filter soil must be small enough to retain the larger size particles of the soil, which in turn retain the smaller sizes of the retained soil. The filter pore size is mathematically a function of its controlling particle size.

Particle sizes are determined with laboratory grain size analyses. Particle sizes are defined in terms of their diameter and gradation in terms of percent by weight finer than a particular diameter. Sizes used in filter and flow design are the D_{15}, D_{50}, and D_{85} sizes. The D_{15} denotes the size of the soil particle for which 15% of the material, by weight, has a smaller particle diameter. Similarly, D_{50} and D_{85} soil denote the size of the surrounding finer-grained soil particles for which 50% and 85% respectively, by weight, of a sample can be expected to have a smaller particle size.

Theoretical, spherical soil particles are illustrated in Figure 10-6. The three "*a*" spheres represent the controlling size of the filter soil, which has been determined to be approximately the D_{15} particle size. The "*b*" particle is the larger size particle of the soil to be retained. This is the D_{85} size particle that, once retained, will create a bridge that retains the finer-grain particles. Mathematically, sphere "*b*" will pass through the pore space of three "*a*" spheres that are approximately 6.5 times the "*b*" sphere diameter. Thus, a ratio smaller than 6.5:1 is required to ensure the "*b*" sphere is retained [Ref: 61].

The soil filtration criterion to prevent piping is presented in Equation 10-5. This states that the D_{15} size of the filter soil must be less than or equal to 5 (five) times the D_{85} size of the upstream, retained soil.

The pore sizes of the filter soil must not be too small as to impede flow. To ensure sufficient permeability of the filter material, the ratio of the filter D_{15} to the upstream soil D_{15} should be greater than four to five, as shown in Equation 10-6.

An additional criteria to prevent movement of soil particles into or through filters is presented in Equation 10-7. For CL and CH soils without sand or silt particles, the D_{15} size of the filter in Equation 10-6 may be as great as 0.02 in. (0.4 mm) and Equation 10-7 may be disregarded. However, if the upstream soil contains particles of uniform, non-plastic fine sand and silt sizes, the filter must be designed to meet these criteria.

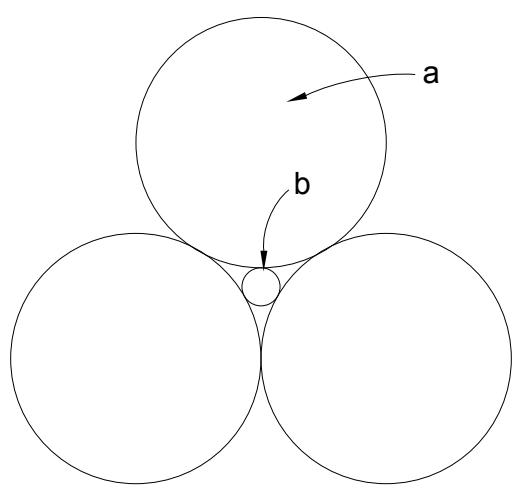

Figure 10-6: Schematic of Soil Filtration Principle (After Cedergren, 1989 [Ref. 61])

$$\frac{D_{15}\ filter}{D_{85}\ soil} < 5 \qquad \text{[Eq. 10-5]}$$

$$5 < \frac{D_{15}\ filter}{D_{15}\ soil} \qquad \text{[Eq. 10-6]}$$

$$\frac{D_{50}\ filter}{D_{50}\ soil} < 25 \qquad \text{[Eq. 10-7]}$$

10.4.2: Geotextile Filtration

In many applications, a geotextile is used as a filter between two soils. The geotextile must retain the soil (retention criterion), while allowing water to pass (permeability criterion) throughout the life of the structure (clogging resistance criterion). To perform effectively, the geotextile must also survive the installation process (survivability criterion) [Ref. 62].

The following design criteria are from the FHWA Geosynthetic Design and Construction Guidelines Manual [Ref. 63].

For steady state flow conditions, the retention criterion is:

$$AOS < B\ D_{85} \qquad \text{[Eq. 10-8]}$$

where:

AOS = apparent opening size of the geotextile
B = a (dimensionless) coefficient
D_{85} = soil particle size for which 85% are smaller

The AOS value of the candidate geotextile is determined from the results of the ASTM D 4751[Ref. 96] test method, and is typically the value published by the geotextile manufacturers/suppliers. The B coefficient ranges from 0.5 to 2 and is a function of the upstream soil, type of geotextile, and/or the flow conditions. For sands, gravelly sands, silty sands and clayey sands (i.e., sands with less than 50% passing No. 200 sieve), B is a function of the uniformity coefficient, C_u ($C_u = D_{60}/D_{10}$), of the upstream soil. Typical values of B for various values of C_u are:

$$C_u < 2 \qquad B = 1 \qquad \text{[Eq. 10-9A]}$$

$$2 < C_u < 4 \qquad B = 0.5\ C_u \qquad \text{[Eq. 10-9B]}$$

$$4 < C_u < 8 \qquad B = 8/C_u \qquad \text{[Eq. 10-9C]}$$

$$C_u > 8 \qquad B = 1 \qquad \text{[Eq. 10-9D]}$$

If the upstream soil contains any fines, use only the portion passing the No. 200 sieve for selecting the geotextile.

For silts and clays (more than 50% passing the No. 200 sieve), B is a function of the type of geotextile.

for wovens, $B = 1$ $AOS < D_{85}$ [Eq. 10-10A]

for nonwovens, $B = 1.8$ $AOS < 1.8\ D_{85}$ [Eq. 10-10B]

and for both, $AOS < 0.011$ in. (0.3 mm) [Eq. 10-10C]

The above retention criteria are for internally stable soils. Laboratory performance tests should be conducted for such soils. Again, note that the above criteria are for steady state seepage. For dynamic flow conditions see Holtz et al. (1997) [Ref. 63].

For steady state flow, low hydraulic gradient, and well graded or uniform upstream soil, the permeability and permittivity criteria are:

for permeability:

$$k_{geotextile} > k_{soil} \qquad \text{[Eq. 10-11]}$$

for permittivity:

$$\Psi > 0.5 \text{ sec}^{-1} \text{ for } < 15\% \text{ passing No. 200} \qquad \text{[Eq.10-11A]}$$

$$\Psi > 0.2 \text{ sec}^{-1} \text{ for } 15\% \text{ to } 50\% \text{ passing No. 200} \qquad \text{[Eq. 10-11B]}$$

$$\Psi > 0.5 \text{ sec}^{-1} \text{ for } > 50\% \text{ passing No. 200} \qquad \text{[Eq. 10-11C]}$$

where:
k = coefficient of permeability
Ψ = geotextile permittivity, which is equal to $k_{geotextile}/t_{geotextile}$ (i.e., permeability/thickness)

For critical or severe applications, a geotextile permeability of 10 times the soil permeability should be used. The geotextile permittivity is determined from the results of the ASTM D 4491 [Ref. 99] test method.

For steady state flow, low hydraulic gradient and well graded or uniform upstream soil, the clogging criterion is:

$$AOS > 3\ D_{15\ (upstream\ soil)} \qquad \text{[Eq. 10-12]}$$

This equation applies to soils with $C_u > 3$. For soils with $C_u \leq 3$, a geotextile with the maximum AOS value from the retention criteria should be used.

For a more thorough treatment of geotextile drains see [Refs. 62 and 63].

10.4.3: Soil Permeability

A retaining wall designer should have an understanding of the variability of permeability values with soil types, and an appreciation of the flow capacities of various soil types. The Table 10-1 illustrates permeability and flow capacity range of various soils.

Section 10.5: Water Bodies in Front of Walls

SRWs often are used for retaining soils along bodies of water such as retention and detention ponds, lakeshores, streams and rivers, and open channels. With proper design, SRWs can be successfully used where the wall be: submerged permanently, subject to fluctuating water levels above and below the bottom of the walls, or exposed to wave action. The design of the SRW with water bodies of water in front of them have special considerations and issues that should be addressed, including, but not limited to:

- Foundation Concerns
- Rapid Draw Down
- Bouyant Soil Weights
- Reinforced Fill Material

Table 10-1: Typical Coefficients of Permeability and Flow Capacities for Various Soils.

General Soil Description[a]	Typical Coefficient of Permeability (ft/day)	Q^b (gpm)	Square Feet Needed for Discharge Equal to a 2-Inch Pipe[c]
1 1/2 -1 inch gravel	140,000	6.8	1.2
1 1/2 inch gravel	50,000	2.3	3.5
3/8 inch - #4 gravel	8,000	0.36	22
Coarse sand	800	0.045	180
Fine sand	1.0	0.00045	18,000
Silt	0.001	0.00000045	18,000,000
Fat clay	0.00001	0.0000000045	2,000,000,000

(a) General (i.e., not specific per USCS Classification of Table 2.2) description for illustration of order of magnitude differences in permeability.
(b) per square foot of area and gradient equal to 0.01
(c) gradient equal to 0.01

- Scour/Erosion
- Ice in Front of Wall

While the responsibilities of each design profession is determined by their contract with the owner, typically the prediction of wave action, water flows volumes, high water levels in the body of water, the potential for scour and erosion, presence of ice forces, and details to address scour and erosion are the responsibility of the project site civil engineer or a engineer specialized in hydraulics. Further discussion of several of these topics in relation to SRWs is presented in Section 11.

10.5.1: Foundations

The foundation soils at the edge of a body of water may be saturated and sometimes consist of soft, compressible, or loose soils. These foundation soils must be able to support any new loads introduced by the wall installation. Groundwater present in foundation soils can decrease the bearing capacity or global stability around a retaining wall, as discussed in Section 12.3 and 12.4. If native foundation soils at a shoreline cannot properly support a planned wall, foundation improvement of unsuitable soils might address this. Some foundation improvement options are outline in Section 12.3.

10.5.2: Rapid Draw Down

If the water level in front of the wall will rise above the base of the wall at times and then suddenly drop (rapid draw down) this can create some temporary hydrostatic pressure on a SRW. The SRW units are dry-stacked without mortar, so the joints do allow water in front of a SRW to flow to the backfill soil behind the wall units. For a significant amount of hydrostatic pressure to bear on a wall, the water in front of the wall must first, at least partially, submerge the reinforced soil or the retained soil for sufficient length of time to saturate these soils. If these soils are saturated for some distance behind the wall, and there is then a sudden drop of the water level in front of the wall compared to an elevated phreatic surface in the reinforced soil backfill, this could cause significant temporary hydrostatic pressures. Also, if there is a sudden drop of the groundwater level in the reinforced soils compared to the retained soil water level, hydrostatic pressures may also occur at their interface.

Significant hydrostatic pressures from rapid draw down are not common for many SRWs for the following reason. SRWs along bodies of water are typically only partially submerged for short periods of time that do not allow significant depth of saturation of soils behind the wall face. Examples of such situations would be a SRW surrounding a detention pond that only has water above the base of the wall for a few hours or days after a storm event or walls along channels or streams with water levels that only rise above the base of the wall a few times a year, for short periods. If the soil behind the wall contains some fine soils and sands, even for well-graded granular crushed aggregate, it will take a significant amount of time for the water in front of the wall to saturate the backfill soil. So for many walls in such circumstances, significant rapid draw down pressures are unlikely to occur.

There are some situations, however, where rapid draw down of the water in front of the wall could cause significant loads on the wall, even if the wall backfill has low permeability. Some walls may be planned to be submerged almost constantly over their design life, such as a wall along a decorative pond with standing water or along a reservoir, where the wall will be partially submerged during normal reservoir water levels. If the water level in the lake or pond is reduced suddenly at some point during the wall's design life by sudden draining (rather than much more gradual reduction of water levels due to evaporation) such walls could experience hydrostatic pressure at the moment of rapid water draw down.

In addition, walls with highly permeable backfill, such as free-draining open-graded gravels (GP), can also be susceptible to hydrostatic pressures from rapid draw down, even after a just a short time of being submerged. The free-draining backfill will quickly saturate during elevated water levels leaving an elevated phreatic surface in the backfill. While the dry-stacked SRW units would pass some water quickly through the joints of the wall face, the wall face may still be significantly less permeable than free-draining backfill. Thus, during a sudden drop of water in front of the wall, significant water pressures could occur at the wall face. In such a case, the water pressure bearing on the wall face could be minimized by providing multiple levels of drain pipes at various heights of the wall. Also, a well-graded gravel backfill with lower permeability might be substituted for the free-draining aggregate backfill to minimize the amount of water the soil can absorbed during short periods of higher water levels in front of the wall.

Hydrostatic pressures could also occur between the reinforced and retained soils if they are disparate materials and the reinforced soil is permeable enough to allow a sharp drop in phreatic surface between retained and reinforced soils to occur after a rapid draw down event. Generally, the phreatic surface in the retained soil is well below the wall base because the retained soils are far back enough from the water in front of the wall to avoid saturation by this water. Thus, the retained soil would not exert water pressures on the reinforced soil even if the water level in the reinforced zone can drop quickly.

For walls that are determined to likely experience hydrostatic pressures in a rapid draw down situation, AASHTO has suggested a minimum differential hydrostatic pressure for 3 ft (0.91 m) of water height [Ref. 36].

10.5.3: Bouyant Soil Weights

While there are some situations where water levels might require considering the buoyant weight of submerged soils, this concern will not be typical for most SRWs projects for the same reasons noted above in Section 10.5.2 Rapid Draw Down. If, however, a lower permeability wall backfill soil and the foundation soil are submerged long enough to fully saturate and the water level in front of the wall is later suddenly dropped, the backfill soil still may be buoyant at the same time the previously countervailing water pressure in front of the wall had been removed. If such a situation occurs, some of the resisting forces provided by weight of the reinforced fill zone may have to be reduced to account for its buoyant weight of the soil. As is the case with other surface and ground water issues discussed in this section, it is considered preferable, whenever possible, to provide proper drainage systems in and around a SRW to avoid potential buoyancy concerns, rather than to allow them to occur and then designing for the resulting changed wall properties and loads.

10.5.4: Reinforced Fill for Waterfront Applications

If a wall will be partially submerged at times by a body of water in front of it, the reinforced fill material must be specified to perform in this saturated condition. However, with appropriate design considerations, a wide range of soils types can be used for reinforced fill for SRWs in water applications. Reinforced material successfully used for SRWs in water applications include: free-draining aggregate, well-graded gravels, and sands. Well-graded gravels with some fines and sand, material typically used as crushed aggregate road base, is generally the preferred backfill material for water applications. For some short detention pond walls, even fine-grained lean clays and silts have been successfully used for reinforced fill.

To minimize rapid drawdown concerns, it is suggested that the reinforced backfill have similar, or more, permeability than the retained soil, to avoid created resistance to drainage of the retained soil if it becomes saturated.

It is possible to use a variety materials as reinforced soil for water applications, if properly addressed in the design. Some materials, however, present more design and installation concerns than others. Free-draining aggregates (no more than 5 percent fines – No. 200 sieve) retain much of their shear strength when saturated and will not be prone to settlement when saturated due to lack of fines. Without carefully designed internal drainage systems, however, open-graded gravel backfill can allow temporary hydrostatic pressures because its disparate permeability compared to the SRW units wall face and any finer-grained retained soils. Also, the free-draining gravel zone can very quickly fill with large volumes of water that can then cause loading on the wall. Thus the rapid draw down issues discussed in Section 10.5.2 might be an issue with extensive reinforced zones of free-draining aggregate.

For a wall that is only exposed to water for short periods, low-permeability, finer-grained reinforced backfill soils should have very little depth of saturation. Any fine-grained reinforced soil that is saturated for long-periods, however, may lose its strength and cause secondary settlement. In addition, generally, reinforced fill is suggested to have no more than 35 percent fines, so this suggestion would apply in water applications also.

Sands provide fairly well draining reinforced materials without the concerns of finer-grained soils. Sands have been used successfully as reinforced fill for many water application walls along channels and rivers, however, sands may be more prone to erosion or piping when exposed to flowing water, without proper design considerations to address this.

Angular, well-graded gravels provide the advantage of a reinforced material that will best retain its strength properties when saturated and provide improved resistance to erosion while also being less prone to quickly filling with large amounts of water and causing temporary hydrostatic pressures associated with a reinforced zone of free-draining gravel. While a well-graded gravel is significantly more stable against erosion than finer soils and fine sands, the fine fraction of such a gravel still could be an erosion and piping concern if frequent flow of water in and around the wall system is anticipated.

10.5.5: Scour and Erosion

Walls that will be exposed to wave action or water flow at their base, on the face of the wall, or walls that will be potentially fully-submerged during their lifetime should be designed to protect against the scour and erosion that may result from the water movement. Such design concerns around walls and other structures is typically the responsibility of the project civil engineer or an engineer specializing in hydraulic engineering. Further guidance on scour and erosion considerations for civil engineers around SRWs is provided in Section 11.4.

10.5.6: Ice Forces in Front of Wall

Walls in northern climates can be damaged by ice forces exerted from the front of the wall. If the water level is above the base of the wall when the water freezes, thermal expansion of the sheet ice at the top of the water can

place very large loads on the front of the wall, pushing it into the soil behind the wall. This can be a particular problem for short walls that have little weight from above to provide sliding and shear resisting forces. If the water level at wintertime is typically close to the base of the wall, some ice effects may be partially disrupted by placing rip-rap at the base of the wall. If the area of typically problematic confined ice sheets is small and the water is not exposed to lengthy periods of freezing, sometimes the ice sheet can be broken up by providing circulation of the water. It may not be possible, however, to practically mitigate effects of ice forces or large sheets that have enough force through expansion or wind-driven flows to overwhelm the passive resistance of the retained soil behind a wall. Changes in water levels and ice flows can also create uplift forces on the wall units as well. Floating ice packs in heavy wave action or stream flows can create large impact forces on walls. For shorter walls, rather than attempt to design against the worst pressures and impacts, it may be more practical to acknowledge the possible damage due to ice forces and plan as a maintenance issue to re-stack SRW units occasionally displaced by ice forces.

SECTION 11
DESIGN GUIDELINES FOR SITE CIVIL ENGINEER

On the basis of the suggested roles outlined in Section 3, this section presents guidelines for the typical design duties of the site civil engineer. Geosynthetic-reinforced soil SRWs have several special design considerations for the site civil engineer. The site civil engineer must plan wall layout with consideration of the SRW footprint and space constraints, plan appropriate slopes around SRWs, ensure excessive stormwater drainage is not directed toward SRW systems, avoid placing structures within the geosynthetic reinforced zone, and address erosion and scour concerns around SRWs. Because the bulk of the stability of geosynthetic-reinforced SRWs is provided by the reinforced soils mass, the site civil should be attentive in their site design to ensuring integrity of this soil mass against water flows, saturation, and erosion.

The items presented in the following discussion are not an all-inclusive list of issues for the site civil engineer to address on sites involving SRWs. This discussion is meant to only highlight common civil design features that should properly interact with the SRWs on site when the civil engineer specifies an SRW. Many of these items have been covered in detail in Section 4, *Wall Layout and Planning*.

Section 11.1: Wall Layout and Civil Drawings

In developing site layout and grading plans that include SRWs, the complete footprint needed to install the SRW system including the batter of the wall face, the length of geosynthetic behind the wall, and in cut situations, the area needed for the temporary excavation slopes behind the wall system should be considered. Often, the final geosynthetic layout of the SRW is not available when the site civil is preparing the site plan, however, the site civil engineer can often obtain preliminary estimates of geosynthetic lengths from local SRW and geosynthetic vendors to assist in their planning.

To account for the batter of the wall face on the site plan drawings, it is suggested that the full footprint of the wall face, including the alignment of the front of the wall face at the bottom of the wall and the alignment of the back of the wall units at the top of the wall be shown. To evaluate locations of above and below grade structures (such as exiting buildings or planned utilities) near planned SRWs, the drawings could additionally show the estimated geosynthetic-reinforced zone on the site plan.

When possible, it is suggested that the site civil engineer also provide generalized wall elevations/profiles for planned SRWs. Often several types of retaining wall units are specified or allowed, so wall profiles (elevations) do not necessarily need specific wall units or wall details (which are generally provided by the SRW design engineer as a part of their final design wall elevation drawings) but can simply show planned grades at top and bottom of wall. While general in nature, such wall profiles can reveal any problems in the planned grading and wall layout. Also, by interpreting grading plans with profile drawings, bidding contractors can avoid having varied interpretations and wall area estimates. Generally, grading at the wall ends should have the wall profile tapering down to zero exposed height, unless abutting other structures.

If there is no room for a setback wall face, the site civil engineer can specify one of the many SRW unit types that can be installed vertically or “near-vertical” (just one to two degrees of batter from vertical). If there is no room for an OSHA compliant temporary slope behind the geosynthetic zone, in cut situations, then relocating the wall or temporary shoring should be considered. If SRW installation could undermine existing structures, the site civil engineer can consult with the geotechnical engineer and SRW engineer regarding wall location and design options.

When planning alignment of SRWs, the site civil should evaluate and address any location and easement issues such as wetland boundaries, property lines, existing utility easements, and no-disturbance areas. An advantage of SRWs

is that they often can be fully constructed from behind the wall face, so the front face of the wall can be planned to be within a foot or two of construction limits, such as a wetland.

Section 11.2: Surface Drainage Design Considerations Around SRWs

Stormwater runoff can cause substantial damage to earth retaining structures both during construction and during the life of the structure due to erosion, saturation, and increased hydrostatic pressures, if not properly addressed and controlled in the site civil design. This is particularly true for sites where surface drainage flows toward the SRWs.

One of the major problems associated with site drainage is that civil features are designed for an assumed or prescribed design storm event. Many stormwater management plans are based on 10 year or 25 year storm events, however, this design event will be exceeded sometime in the future, for instance by the 100-year event. Extreme events do occur, which result in short duration (i.e., 1 – 3 hours) flows that significantly exceed the design capacity of the stormwater management system.

If surface water flows toward any type of retaining wall, it is often picked up in a gutter or other stormwater collection feature; and this feature is often sized based upon the design storm event. The volume of water between the design event (ex., 10-year) and an extreme event (ex., 100-year) is usually significant. When this occurs, site flooding can result, causing overtopping of the retaining wall, erosion, and an increase in hydrostatic forces within and behind the reinforced soil mass. The site civil engineer should evaluate where this excess water might go during an extreme event. If the SRW is at the low end of the site, the site civil engineer should design surface drainage and stormwater collection features (e.g., curb inlets, drop inlets, swales, etc.) to avoid the following: overtopping the SRW structure, directing water to or along the top of the SRW face, or ponding water behind the wall during an extreme event. Generally, directing excess water runoff to overflow the top of a SRW should not be allowed. Also, the civil design should not direct surface drainage into the subsurface drainage of a SRW system.

If, in spite of surface drainage mitigations, the analysis predicts the stormwater may still accumulate at the top of the wall or may overtop the wall, the site civil engineer should confer with the SRW engineer for the feasibility of allowing this overtopping and any SRW design modifications that may be necessary. The SRW engineer may be able to design an overflow system for the wall structure to handle water from extreme events. This may include directing surface water to a scupper that directs water over the top of the SRW units and down the wall face. It may consist of a low spot along the wall's elevation with surface water directed to this location, as illustrated in Figure 11-1. Without a designed overflow feature the water may flow over the top of the SRW units, in random or sheet flow pattern.

Figure 11-1: Surface Drainage Feature on a SRW

Section 11.3: Grading for Surface Drainage Around SRWs

It is preferred that the grading be designed so that surface water does not flow toward the SRW, or pond behind the SRW, but rather so that surface water is directed away from the wall. This can be done in a number of ways including: making the center of the wall alignment a high spot, avoiding low spots in the grading immediately behind the wall, keeping the top of wall flush with or below the surface behind the wall, providing drainage collection swales well away from the wall system, and sloping grades away from wall and beyond the ends of walls. If the area above the wall is paved, in some cases a curb and gutter can assist in directing water flow away from the wall, however, if slopes are directed towards raised curbing, water flows in big storm events may easily overtop them, so it is preferred to not rely solely on curbs to redirect heavy water flows near the top of walls.

As part of the grading plan, the site civil engineer should plan the top of wall to match the planned grades behind the wall, or be slightly below them, rather than specifying the top of wall extend above grade. SRWs with the upper rows of units, or cap units, extending above the grade behind the wall may trap runoff water, creating either a standing pool of water during a storm event or erosion. This water could find its way into the column of gravel fill behind the SRW units and possibly cause damage to the internal structure of the geosynthetic reinforced soil mass. If the top of wall must extend above grade, the site civil engineer should consult with the SRW engineer to determine how to best mitigate these surface drainage concerns.

If lower areas or swales are needed behind a SRW to collect surface drainage, it is suggested these be placed beyond the back of the geosynthetic reinforced zone. It is strongly suggested that a low spot or swale not be placed directly behind the wall face, even if sufficient surface slope is provided to gravity flow water away. In extreme events, these low spots and swales, even when constructed of asphalt or concrete, can become flow paths that enable progressive erosion at the edges and just behind the wall units.

Section 11.4: Erosion and Scour Issues

Slopes at the top or toe of a SRW, and grades at the ends of walls, are potentially susceptible to erosion from surface water. The potential for erosion around the SRW should be considered, as would be for the entire site, and appropriate erosion control measures included for any specified slopes, as required. Given SRWs are generally reinforced-soil structures, special attention to the erosion concerns in the site design is appropriate as erosion could compromise the wall material that provides wall stability; the reinforced soil mass.

In particular, areas around waterfront walls should be designed to protect against the scour and erosion at the wall base, ends of the walls, or even above and behind the walls, for walls that will be potentially fully-submerged during their design life. A common issue for walls along lakeshores, streams, rivers, or channels is the potential for scour at the base of the wall due to wave action or high water flows. Scouring concerns are generally addressed by extending the wall bottom below predicted scour depth and providing scour protection at the base of the wall. Scour protection typically consists of a geotextile overlain with rip rap. Articulated concrete blocks or other types of mats are often used for base protection of channels. Prediction of scour depths and wave forces or water flow velocities and design details to address these issues are typically the responsibility of the project civil engineer or an engineer specializing in hydraulic engineering.

Erosion around SRWs in water application walls can be a particular concern where water flow may wash away soils, such as at the ends of the wall and or even at the top of the wall, if the wall high water levels will overtop the wall. As with surface drainage issues, the grading and erosion control plans for water application walls should determine water flow patterns, evaluate areas of concern, and either direct water away from the wall area or provide means to protect edges of the wall from erosion.

Section 11.5: Stormwater Collection–Catch Basins/Drop Structures

As stated previously, the site civil engineer should provide surface grading and stormwater collection structures to direct surface drainage away from the SRWs. Whenever possible, catch basins, drop inlet structures, and storm drain lines should be located outside the reinforced soil mass. If these structures malfunction, the potential for hydrostatic water forces to develop and impact the SRW system is increased dramatically. Erosion of the soil around these structures, due to water flowing toward or around them, can also cause problems for SRWs.

Often when retaining walls are at the low points of sites, grading is designed to slope all grades down towards the retaining wall with catch basins and low spots that are directly behind the face of the retaining wall. This creates several concerns for SRWs including top of wall erosion issues, pooling water directly behind the wall, and the difficulty of incorporating the catch basins and drop structures within the reinforced soil mass. Whenever possible, low points for catch basin locations should be located behind the SRW geosynthetic reinforced zone. This minimizes erosion issues at the wall face, reduces the risk of surface water entering the gravel fill column behind the wall face, and shifts any ponding water further away from the wall system where it is less likely to have a destabilizing effect of the wall.

When catch basins, drop structures, and manholes must be placed in the reinforced soil mass, the site civil engineer should consult with the SRW engineer regarding the feasibility of the planned locations, ways to improve the durability of these structures and their connections, and special design details and specifications for the geosynthetic reinforcement and backfill soil. Because the SRWs are reinforced soil structures, any stormwater structures placed in the reinforced zone may experience some post-construction settlement even when properly compacted, and this could affect the integrity of the drainage structures. If settlement occurs, it can cause openings between inlet structures and discharge pipes or other joints. For these reasons, the site civil engineer should carefully evaluate and address these issues with the project geotechnical engineer and the SRW engineer.

Section 11.6: Drainage Structure Outlet Pipes Passing through SRW Face

It is preferable to have no outlet pipes greater than 6 in. (152 mm) in diameter penetrate the wall face. When practical, the site civil engineer should direct larger piping around the wall system rather than outletting through the face. Wall face penetrations for stormwater management structures have the potential to carry large quantities of water at large velocities. If construction of the lines is substandard, water may escape the storm sewer lines and saturate the fill, possibly causing erosion of the soil into the storm line and a build up of hydrostatic pressure. Also, there can be differential settlement between the pipe and the wall face. The result can be erosion at the toe of the wall or movement of drainage stone and/or reinforced fill through the joint between pipes and the wall face units. If piping is directed through the wall face, it is preferable that the site civil engineer design the pipe alignment to be perpendicular to the wall face, to minimize the intrusion in the geosynthetic reinforced zone and to minimize the pipe outlet erosion/scour concerns.

Section 11.7: Stormwater Management Ponds

SRWs are often successfully used around stormwater management ponds to increase their capacity by adding depth and replacing sloped sides. With proper design consideration, SRWs can be used for pond walls including situations where the pond water levels will submerge the walls. The site civil engineer should provide predicted water levels to the SRW engineer for consideration in their wall design.

The site civil engineer should address any erosion or scour concerns in the detention pond, particularly where stormwater drainage pipe outlets the face of the wall. The site civil engineer should provide predicted scour depths at the base of the wall to the SRW design engineer, including any needed erosion control structures such as cast-in-place concrete aprons, head walls, and rip-rap in their designs.

Section 11.8: Waterfront Application Walls

SRWs have been successfully and extensively used for retaining walls along bodies of water such as ponds, lakes, streams, rivers, and channels. Several significant civil engineering issues arise when retaining walls are placed along shorelines such as erosion and scour considerations. Where wave action or high flow volumes are anticipated, the potential scour depth should be determined by the project civil engineer or an engineer specializing in hydraulics. Scour at the base of walls can often be minimized by providing scour protections such as rip-rap underlain by geotextile. The project civil engineer should also address other sources of erosion from the body of water, such as the edges of structures and from flood waters overtopping the walls and flowing over the material behind the top of the wall, as discussed in Section 11.4.

Shoreline walls my also be subject to impacts from objects in the water such as flood debris in a river or possible ice sheets driven by wind. The potential damage to the SRW should be addressed and sources of impacts minimized whenever practical.

Section 11.9: Utilities within Reinforced Soil of SRWs

Generally, utilities should not be located within a SRW reinforced soil zone because of the difficulty of placing geosynthetic reinforcement around utility lines as well as the difficulty reaching the utilities for future repairs without structurally damaging the geosynthetic soil reinforcement. An additional concern is post-construction settlement of the wall backfill damaging the utilities. Sometimes, shallower utility lines running perpendicular to the wall face can be accommodated with special detailing by the SRW engineer. Utility lines running parallel to the wall face within the geosynthetic reinforcement can rarely be accommodated and when possible only in limited zones with specialty details. Therefore, when planning the site utility layout, the civil engineer should plan to keep utilities beyond the geosynthetic-reinforced soil zone of the SRW.

Section 11.10: Underground Stormwater Detention Structures and Permeable Pavements

In order to optimize development at a site, owners are more frequently placing stormwater management facilities underground. These systems may be holding systems or recharge systems. Recharge systems allow the stormwater to percolate into the ground (such as perforated pipes surrounded by aggregate). It is suggested that any type of underground stormwater detention structures be kept outside the SRW geosynthetic-reinforced soil mass for the same reasons other utilities are kept outside SRW systems. Recharge systems have an additional concern because they may cause hydrostatic forces to develop, unless subsurface drainage systems can be implemented to remove the water. Thus underground recharge systems should not be placed directly behind the reinforced zone. Permeable pavements can act as recharge systems, as such permeable pavements directly behind SRWs should be modified in design to avoid hydrostatic pressure on wall systems and to avoid continual saturation of the reinforced fill below the permeable pavement. As an example, permeable concrete or asphalt pavement may be transitioned to impermeable pavement behind and on top of a SRW. If permeable pavers are used, for reasons of consistent aesthetics, it may be desired to continue these in the area above the wall. In this case, a liner is recommended to underlie the aggregate base of the permeable pavers that directly impact the SRW system, to direct water away from a SRW and to avoid any saturation of the reinforced backfill.

Section 11.11: Snow Management

In the northern states, movement of accumulated snow around SRWs can be a concern. In parking areas, snow plows may find the top of SRWs the most convenient or only place to pile snow. Large piles can create heavy snow loads that the SRW was not intended or designed to support. Also the long, slow melt of the snow pile may cause deep saturation of the reinforced and retained soil behind an SRW that would not occur just from stormwater. This can result in a loss of shear strength and an increase in driving forces on a SRW. In some cases, snow removal

is accomplished by pushing snow over the top of a wall. This can cause damage to the top the wall and possibly overturn the top unreinforced units. In northern states, the site civil should consider how accumulated snow will be managed on site and take design measures to ensure snow will not be piled or thrown over the top of SRWs. This may include designating snow storage areas and specifying permanent signage to indicate where on the site the snow should be stored and signs at the top of walls warning that snow should not be piled there. If the site civil engineer cannot determine a way to avoid snow from being piled at the top of a SRW, they should consult with the SRW engineer to design the SRW to accommodate the predicted snow loads and soil saturation concerns.

Section 11.12: Fencing, Guide Rails, and Traffic Barriers

Generally the site civil engineer is responsible for traffic control structures and determining when and where fencing, guide rails, or traffic barriers are needed on a site and in such a role, the site civil should design and specify structures appropriate for use around SRWs. While the structural design of these structures are typically the responsibility of the structural engineer and detailing the incorporation these structures within a SRW are typically the responsibility of the SRW engineer, the site civil engineer should address the purposes, locations, and needed load capacity.

SECTION 12
DESIGN GUIDELINES FOR PROJECT GEOTECHNICAL ENGINEER

While each engineering professional's responsibilities for any project will be determined by what services and roles the owner or owner's representative contracts them to perform, it is recommended the project geotechnical engineer be responsible for the following: providing the soil shear strength parameters and index properties for use in design of the SRW, for determining the groundwater table, determining seismic conditions at the site, and for performing global stability, bearing capacity, and settlement analyses for the SRW.

A qualified geotechnical engineer familiar with the project site should evaluate all engineering data and provide recommendations and/or an assessment of the following items:

- Soil Properties
- Bedrock
- Groundwater Conditions
- Bearing Capacity
- Settlement
- Slope stability
- Seismic

Section 12.1: Geotechnical Investigations

Many projects involving SRWs require a site specific soil investigation before retaining wall design can begin. Local building code will often establish minimum criteria for when a site specific geotechnical report is required. Building codes or the geotechnical engineer's judgment may also require a site specific subsurface exploration. Beyond any building code requirements, a site specific subsurface exploration and geotechnical report is suggested if any of the following conditions exist:

- Significant structures (i.e., those that involve potential for loss of life or significant property damage)
- Sites on or adjacent to operating or abandoned landfills or subsurface mines
- Areas where Karst topography is present
- Steep slopes in the vicinity of the retaining wall
- Cohesive soils are proposed for the infill soil
- Groundwater elevations above the proposed bearing pad elevation
- Seismic activity in area
- Weak or unstable native soils are present (i.e. marine clays)

If the original geotechnical report for a larger project does not include investigation and recommendations specifically for the SRWs, it is recommended that the geotechnical engineer provide additional review and recommendations for the SRWs and SRW locations.

The feasibility of using an SRW depends on the existing topography, subsurface conditions, and soil/rock properties. It may be necessary to perform a comprehensive subsurface exploration program to evaluate site geotechnical conditions prior to designing a new SRW.

When performing subsurface investigations, geotechnical conditions should be considered not only in the area of the construction and at the wall face but also under the geogrid reinforced zone, as well as behind and in front of the SRW system, to assess overall performance behavior. The subsurface exploration program should address the site conditions that not only influence the design and stability of the final structure, but also the conditions that will prevail throughout the construction of the structure, such as the stability of temporary construction slopes.

The cost of a reinforced soil structure is greatly dependent on the availability of the required type of backfill materials. Therefore, investigations may be needed to locate and test locally available materials that may be used for backfill with the selected system.

12.1.1: Subsurface Exploration

The subsurface exploration program generally consists of soil soundings, borings, test pits, or a combination of the three techniques. The type and extent of the exploration should be decided after review of the preliminary data obtained from the field reconnaissance and in consultation with a geotechnical engineer or an engineering geologist. The exploration must be sufficient to evaluate the geologic and subsurface profile in the area of construction.

The geotechnical subsurface exploration around a SRW should be similar to what would be done around any type of proposed retaining wall. The scope of the subsurface exploration around SRWs should be planned so that the geotechnical engineer can provide the soils and subsurface data needed for the SRW design, as described in Section 12.2, and so the geotechnical engineer has needed data to perform the foundation and global analyses around SRWs, as described in Sections 12.3 and 12.4. The following guidelines are suggested for the subsurface exploration for potential SRW applications, but are not absolute or inclusive:

- Soil borings should be performed at intervals of:
  - 100 ft along the alignment of the soil-reinforced structure,
  - 150 ft along the back of the reinforced soil structure,
  - significant structural or grade changes.
- For planning purposes, the width of the SRW (including geogrid lengths) may be assumed as 0.6 to 0.8 times the anticipated height, unless steep slopes are present, then longer grid lengths may be anticipated. For complex sites, the geotechnical engineer may want to request preliminary engineering of the SRW to aid in their subsurface exploration plan.
- The subsurface exploration, including but not limited to boring depth, coring of bedrock, groundwater measurement and monitoring, soil sampling, and in situ testing, should be done around SRWs by the same standards and methods as elsewhere on site.
- Adequate bulk samples of available soils should be obtained and evaluated to determine the suitability of the soil for use as backfill in the SRWs. Such materials should be obtained from all areas from which preliminary reconnaissance indicates that borrow materials will be used.
- As with any other type of proposed structures, test-pit explorations should be performed around planned SRWs in areas showing instability, karstic activity or to explore further availability of the borrow materials for backfill. The locations and number of test pits should be decided for each site.

The development and implementation of an adequate subsurface investigation program can be a key element in the successful project implementation. Causes for distress experienced in projects are often traced to inadequate subsurface exploration programs, which did not disclose local or significant areas of unsuitable soils, causing significant local differential settlement and distress to the facing units of SRWs or even greater distress to the entire SRW structure and structures above the wall. Where the select backfill is to be obtained from on-site sources, the extent and quality must be fully explored to minimize the chance of encountering changed conditions.

12.1.2: Laboratory Testing

Soil samples should be visually and/or manually classified and appropriate tests performed for classification according to the Unified Soil Classification System (ASTM D 2488 [Ref. 77]). These tests permit the engineer to decide what further field or laboratory tests will best describe the engineering behavior of the soil at a given project site. Index testing includes determination of moisture content, Atterberg limits, compressive strength, and gradation. The dry unit weight of representative undisturbed samples should also be determined.

For large or complex walls or walls built in areas of known problem soils, shear strength determination by unconfined compression tests, direct shear tests, or triaxial compression tests may be needed. The geotechnical engineer should determine the need for such testing depending on the uniformity, consistency, and predictability of the site soils, based on their knowledge of local geotechnical conditions and their knowledge of on-site subsurface conditions. At sites where compressible, cohesive soils are encountered below the foundations of the SRW, the geotechnical engineer may need to perform consolidation tests to obtain parameters for making settlement analyses. Ideally, both un-drained and drained (effective stress) parameters should be obtained for cohesive soils to permit evaluation of both long-term and short-term conditions.

Depending on the geometry of wall configurations on site, the accuracy of the soil property determinations may be an economic issue and thus factor into the planned scope of soil testing. With the presence of steep slopes around a retaining wall, small changes in soil property assumptions, such as the predicted friction angle of the soil, can have a profound effect on the predicted loading on the retaining walls. Thus the required geogrid reinforcement length for a SRW and hence on the cost of wall materials and earthwork can be very sensitive to assumed soil parameters when there are steep slopes above or below the retaining wall. A relatively small investment in more accurate and thorough laboratory testing that allows the geotechnical engineer to be less conservative in assigned soil properties could yield significant cost savings in design and construction.

Of particular significance in the evaluation of any material for possible use as backfill in the geogrid reinforced zone are the grain size distribution and plasticity. The effective particle size (D_{10}) can be used to estimate the permeability of cohesionless materials. Laboratory permeability tests may also be performed on representative samples compacted to the specified density. Additional testing may include direct shear tests on a few similarly prepared samples to determine shear strength parameters under long and short-term conditions. The compaction behavior of potential backfill materials should be investigated by determining moisture-density relationships.

Where experience indicates reason for concern of high pH (above 9), the soil pH should be determined so that the potential aggressiveness of the backfill material and the in-situ soils behind the reinforced soil mass may be considered in evaluating the long-term strength of the geosynthetic reinforcement.

Section 12.2: Geotechnical Properties for SRW Design

12.2.1: Soil Properties for the SRW Engineer

The soil and subsurface conditions within and around a SRW typically exert the greatest influence on the structural design of the SRW by the SRW design engineer and therefore, accurate geotechnical information is crucial for a safe and efficient design, especially when the site conditions include steep slopes, surcharges on the SRW, or tiered walls. While the ultimate responsibility of each design profession is determined by their contract with the owner, it is recommended the geotechnical engineer provide the evaluation of soil properties and other subsurface conditions in the vicinity of a SRW and report this soil data so that SRW engineers can use it for their wall designs.

The geotechnical properties of the foundation and retained materials as well as the soil properties of the reinforced soil should be provided by the geotechnical engineer to the SRW engineer. If onsite soils are planned for use as reinforced backfill for a SRW, the geotechnical engineer should also evaluate and report the soil properties of this onsite material. As a soil, a proposed source of reinforced soil should be tested and classified by the geotechnical engineer. Reinforced soil is also a wall material, and as such, should have its properties specified by the SRW engineer. Given this dual involvement in the reinforced soil, it is recommended that the geotechnical engineer and SRW engineer should both review and approve any soils planned for use as reinforced soil in a SRW.

Rather than providing already computed retained lateral pressures in the form of equivalent earth pressures as traditionally done for structural engineers, generally it is suggested that for SRW engineers, the geotechnical engineer provide soil classifications and soil densities and frictions angles per the following table:

Table 12-1: Soil Data for In-Situ Materials Provided by Geotechnical Engineer

	Soil Type	Unit Weight	Friction Angle (phi)	Cohesion
Reinforced Backfill (if onsite materials are used)*				n/a
Retained Soil				n/a
Foundation Soils				

* While geotechnical engineers typically evaluate properties of on site soils that are proposed for reinforced fill, the specification of minimum properties required for the reinforced soil, a wall material, is the SRW engineer's responsibility.

Note: For recommended properties refer to Section 2.4.

From the properties in Table 12-1, the SRW engineer will generally determine the active earth pressures on the SRWs themselves per Coulomb's Earth Pressure theory (see Section 5.4). If the geotechnical engineer provides only equivalent fluid pressures (EFPs) rather than those properties listed above, the SRWs engineer would then have to convert these EFPs back to friction angles and soil densities to do a traditional SRWs external analysis per this manual. Given the EFPs are calculated by the geotechnical engineer from both densities and friction angles, without further directions, this leaves the SRW engineer with two unknown variables. In addition, often geotechnical engineers calculate an un-stated load factor (factor of safety) in their EFPs, making it difficult for a SRWs engineer to determine the original soil properties the geotechnical engineers used when calculating the EFPs. Therefore it is preferred for SRWs that the geotechnical engineer provide the raw soil data in Table 12-1 rather than EFPs.

Because this manual's design method conservatively ignores cohesion when calculating lateral earth pressures from the retained soil directly behind the SRWs system, SRWs engineers typically do not need guidance in regards to any predicted cohesion in the retained or reinforced backfill soils. The cohesive strength of foundation soils, however, can be accounted for in the SRW design when evaluating the foundation sliding resistance. Given this, the geotechnical engineer should provide predicted cohesion for the foundation soils, if it indeed exists.

12.2.2: Soil Type Classification

The Unified Soil Classification System (USCS) is commonly used to classify soils and is based on a dual letter system. The advantage of the system is that soils falling into a classification group can be expected to have similar engineering properties [Ref. 28]. Classification can often be based on visual inspection and/or from the results of a number of relatively simple laboratory tests. Additional discussion of soil classification can be found in Section 2.4.1.

12.2.3: Soil Shear Strength

The conventional approach in geotechnical engineering is to describe the shear strength of a soil using a Mohr-Coulomb failure criteria. The Mohr-Coulomb failure criteria relates the normal stress acting on an internal soil failure surface to the peak shearing resistance that is available along that surface. Detailed discussion of shear strength (τ) can be found in Section 2.4.2.

12.2.4: Groundwater Data

The groundwater conditions in the vicinity of the proposed retaining wall system should be clearly stated in the site geotechnical report including anticipated groundwater levels and identification of the potential for hydrostatic pressures or seepage forces on or within the soil retaining wall structure. Ideally the geotechnical report should include the following:

- Current groundwater levels
- Normal seasonal fluctuations

- Maximum previous groundwater elevation
- Regional groundwater flow
- Probable maximum projected groundwater elevation
- Probable influence of proposed site grading changes on groundwater flow and elevation
- Identification of the potential for hydrostatic pressures or seepage forces on or within the soil retaining wall structure

12.2.5: Other Geotechnical Properties

Beyond soil properties and groundwater conditions, other geotechnical considerations of potential influence to the SRW design should be reported including, but not limited to, bedrock location and properties, underground voids such as mining impacts or karst topography, and site seismic conditions.

Section 12.3: Foundation Evaluations and Recommendations

12.3.1: Gravity SRW Bearing Capacity

A geotechnical engineer determining the bearing capacity underlying an SRW can perform this analysis with traditional geotechnical theory. The ultimate bearing capacity (Q_{ult}) is calculated according to the following equation:

$$Q_{ult} = c_f N_c + 0.5\gamma_f B'_f N_\gamma + \gamma_f H_{emb} N_q \qquad \text{[Eq. 12-1]}$$

This is the classical bearing capacity equation for a continuous footing [Ref. 13]. The quantities N_c, N_γ and N_q are dimensionless bearing capacity coefficients that can be obtained from Table 12-2 using the peak friction angle of the foundation soil ϕ_f. In the case of SRWs, the surcharge term [$\gamma_f H_{emb} N_q$] in the bearing capacity equation accounts for the depth of the SRW "footing" in that the depth of the overall wall system is (H_{emb}), the wall embedment below finished grade in front of the wall. The assumption of a permanent surcharge mass must only be exercised if large excavations in front of the wall will not occur for the life of the structure. The stabilizing effects of wall embedment are applicable to bearing capacity since deformation requirements are significantly less stringent for vertical pressure rather than lateral pressure.

The quantity B'_f is the equivalent footing width of the SRW due to eccentric footing loads (based on the width of the units for unreinforced SRWs and width of the reinforced soil mass for reinforced SRWs)

In bearing capacity analysis for unreinforced SRWs, a portion of the compacted aggregate bearing pad (Figure 12- 1) is assumed to act as a conventional continuous footing. The dimensions of the maximum contact area between the bottom of the bearing pad and the foundation soils is calculated assuming that vertical stress from the wall is distributed over an expanded area with side slopes at 2 vertical to 1 horizontal (Figure 12-1). The aggregate leveling pad is assumed to extend at least 6 in. (152 mm) beyond the toe and heel of the base SRW unit and have a minimum thickness of 6 in. (152 mm).

$$B_f = W_u + h_{lp} \qquad \text{[Eq. 12-2]}$$

$$B'_f = B_f - 2e_c \qquad \text{[Eq. 12-3]}$$

Eccentricity can be calculated by summing moments about the center of the footing base. The center of rotation is taken as the point located a horizontal distance $W_u/2$ from the toe of the bottom SRW unit for unreinforced walls. Moments are considered positive in a counter-clockwise direction in this calculation set. Eccentricity is calculated as:

$$e_c = [P_s Y_s + P_q Y_q - W_W e_W]/W_W \qquad \text{[Eq 12-4]}$$

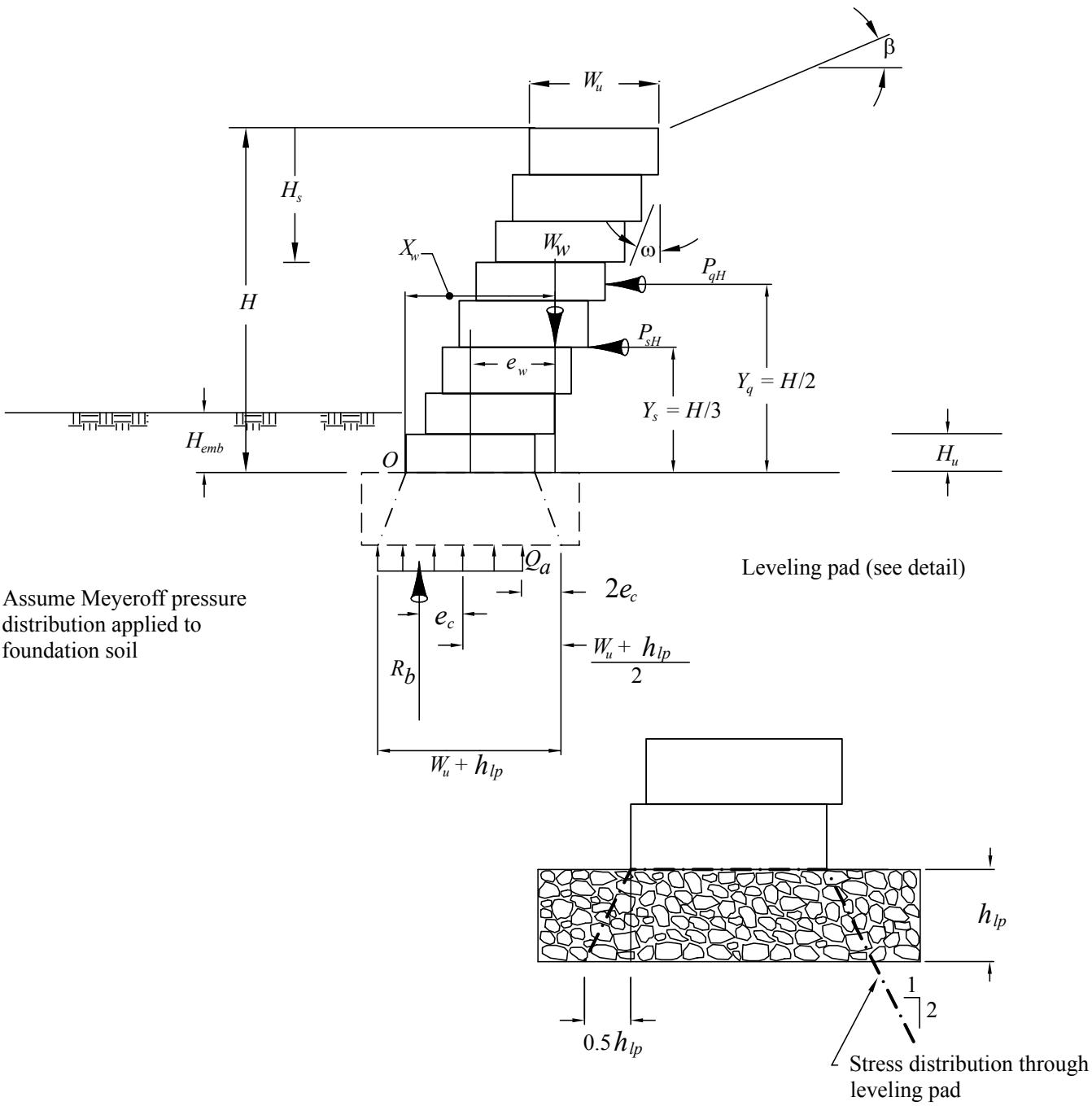

Figure 12-1: Free Body Diagram of External Forces for Conventional Single Depth SRW

where:

$$e_W = X_W - 0.5\ W_u \qquad \text{[Eq. 12-5]}$$

The factor of safety with respect to bearing capacity (FS_{bc}) is determined as follows:

$$FS_{bc} = Q_{ull}/Q_a \qquad \text{[Eq. 12-6]}$$

Q_a, the bearing pressure from the SRW system, should be the value calculated by the SRW engineer.

The following assumptions are made in bearing capacity analysis:

1. The total footing load is distributed uniformly over a portion of the footing width B'_f to account for base eccentricity (e_c) (the conventional Meyerhof approach to geotechnical footing design).
2. Inclination of net footing loads is ignored in order to avoid excess conservativeness in bearing capacity calculations and to be consistent with conventional practice for rigid gravity wall structures. The conservatism is created by the design assumption to ignore vertical component of P_a. Similarly, corrections for footing shape and length are also ignored in this set of calculations.
3. The effect of embedment depth (H_{emb}) to the top of the aggregate leveling pad is accounted for as a dead load surcharge. The soil in front of the wall is assumed to have no shear resistance in bearing capacity analyses. The assumption of a permanent surcharge mass must only be exercised if large excavations in front of the wall will not occur for the life of the structure. If excavations are made they should normally be restricted to short excavation lengths in order to minimize the potential loss of toe support at the wall.

12.3.2: Soil Reinforced SRW Bearing Capacity

Conventional bearing capacity analyses are carried out with respect to the base width L of the reinforced (infill) soil mass. The reinforced (infill) soil mass is assumed to act as a continuous strip footing and must have sufficient width L to prevent overstressing of the foundation soils that may lead to a shear or bearing capacity failure, or excessive deformation of the foundation soil.

In this design manual, the conventional Meyerhof stress distribution approach is adopted. It is utilized to ensure a conservative estimate of applied bearing stress. The effect of eccentricity of the resultant bearing force (net foundation load) is to restrict compressive bearing pressures to an equivalent bearing area B calculated as:

$$B = L - 2e \qquad \text{[Eq. 12-7]}$$

Here e is the eccentricity of the foundation load R_b (Figure 12-1). The quantity (e) can be calculated by summing moments about the center of the base length (L/2) with counter-clockwise being positive:

$$e = \frac{P_{sH}Y_s + P_{qH}Y_q - W_{ri}(X_{ri} - L/2) - W_{r\beta}(X_{r\beta} - L/2) - q_d L_\beta (X_{q\beta} - L/2)}{W_{ri} + W_{r\beta} + q_d L_\beta} \qquad \text{[Eq. 12-8]}$$

The applied bearing pressure (Q_a) acting over the equivalent bearing width B is:

$$Q_a = \frac{[W_{ri} + W_{r\beta} + (q_l + q_d)L_\beta] + P_{aV}}{B} \qquad \text{[Eq. 12-9]}$$

For many projects, the site geotechnical engineer may have established an allowable bearing pressure for the foundation soils that include a settlement as well as bearing capacity criteria. The calculated Q_a should be less than the established allowable bearing pressure; if not, increase L or consult Section 12.3.4.

The ultimate bearing capacity (Q_{ult}) is calculated according to Equation 12-10:

$$Q_{ult} = c_f N_c + 0.5\gamma_f B N_\gamma + \gamma_f H_{emb} N_q \qquad \text{[Eq. 12-10]}$$

The non-dimensional bearing capacity coefficients N_c, N_q and N_γ can be found in Table 12-2. The surcharge term [$\gamma_f H_{emb} N_q$] in the bearing capacity equation accounts for the benefits of deep (H_{emb}) wall embedments. The assumption of a permanent surcharge mass must only be exercised if large excavations in front of the wall will not occur for the life of the structure. The stabilizing effects of wall embedment are applicable to bearing capacity since deformation requirements are significantly less stringent for vertical pressure rather than lateral pressure.

For walls on slopes, additional bearing capacity factors for sloping ground in front of the wall, denoted g_c, g_q and g_γ, are included in the bearing capacity equation (Bowles, 1982 [Ref. 109]).

The factor of safety with respect to bearing capacity FS_{bc} is determined as follows:

$$FS_{bc} = Q_{ult}/Q_a \qquad \text{[Eq. 12-11]}$$

If the value of FS_{bc} is less than the minimum design value (typically 2.0, see Table 5-2) the usual strategy is to incrementally increase the reinforced soil base width L, or either increase the embedment depth of the wall or improve the foundation soils and repeat the calculation set. Consult Section 12.3.5 for more strategies to handle difficult foundation conditions if the required base length L is undesirable from a construction or cost perspective.

12.3.2.1: Base Eccentricity

This design manual utilizes base eccentricity e solely to calculate an equivalent footing width B to ensure a conservative calculation of applied bearing pressure. Throughout this NCMA method, the vertical stress at any point used to calculate lateral stress will be the conventional overburden stress (σ_v) (Equation 5-2), appropriate for Coulomb earth pressure theory. This assumption of a uniform vertical stress distribution is substantiated by data from instrumented test walls [Refs. 31, 33, 39, 40, 42 and 43].

12.3.3: Groundwater Effects on Bearing Capacity

Groundwater table beneath a SRW can decrease the bearing capacity of the foundation soil. Three possible groundwater conditions are possible, as described in Section 10, Figures 10-2 through 10-4. Ultimate bearing capacity varies for these three cases are discussed below. It should be noted that the following equations are concerned with gravity retaining walls. For reinforced soil SRWs, simply replace B'_f with B in the equations. Additional discussion of the following drainage cases can be found in Section 10.2 and 10.5.

Case 1: Groundwater table remains at a distance 2/3*H* below the bottom of the wall for the design life of the structure (Figure 10-2).

Ultimate bearing capacity (Q_{ult}) when the groundwater is well below the leveling pad (e.g., greater than 2/3H below the toe of the wall) is calculated at follows:

$$Q_{ult} = c_f N_c + 0.5\, \gamma_f\, B'_f\, N_\gamma + \gamma_f H_{emb} N_q \qquad \text{[Eq. 12-12A]}$$

where: γ_f = total unit weight of soil

Case 2: Groundwater table rises to or remains just below the leveling pad elevation during the design life of the structure (Figure 10-3).

$$Q_{ult} = c_f N_c + 0.5\, \gamma_{f1}\, B'_f\, N_\gamma + \gamma_f H_{emb} N_q \qquad \text{[Eq. 12-12B]}$$

where:

γ_{f1} = buoyant or effective unit weight of soil
γ_{f1} = $\gamma_{sat} - \gamma_{water}$
γ_{sat} = saturated unit weight of soil
γ_{water} = unit weight of water

Table 12-2: Bearing Capacity Factors (after Vesic, Ref. 13)

ϕ^{+} (deg)	N_c	N_q	N_γ	N_q/N_c	$\tan\phi$
0	5.14	1.00	0.00	0.20	0.00
1	5.38	1.09	0.07	0.20	0.02
2	5.63	1.20	0.15	0.21	0.03
3	5.90	1.31	0.24	0.22	0.05
4	6.19	1.43	0.34	0.23	0.07
5	6.49	1.57	0.45	0.24	0.09
6	6.81	1.72	0.57	0.25	0.11
7	7.16	1.88	0.71	0.26	0.12
8	7.53	2.06	0.86	0.27	0.14
9	7.92	2.25	1.03	0.28	0.16
10	8.35	2.47	1.22	0.30	0.18
11	8.80	2.71	1.44	0.31	0.19
12	9.28	2.97	1.69	0.32	0.21
13	9.81	3.26	1.97	0.33	0.23
14	10.37	3.59	2.29	0.35	0.25
15	10.98	3.94	2.65	0.36	0.27
16	11.63	4.34	3.06	0.37	0.29
17	12.34	4.77	3.53	0.39	0.31
18	13.10	5.26	4.07	0.40	0.32
19	13.93	5.80	4.68	0.42	0.34
20	14.83	6.40	5.39	0.43	0.36
21	15.82	7.07	6.20	0.45	0.38
22	16.88	7.82	7.13	0.46	0.40
23	18.05	8.66	8.20	0.48	0.42
24	19.32	9.60	9.44	0.50	0.45
25	20.72	10.66	10.88	0.51	0.47
26	22.25	11.85	12.54	0.53	0.49
27	23.94	13.20	14.47	0.55	0.51
28	25.80	14.72	16.72	0.57	0.53
29	27.86	16.44	19.34	0.59	0.55
30	30.14	18.40	22.40	0.61	0.58
31	32.67	20.63	25.99	0.63	0.60
32	35.49	23.18	30.22	0.65	0.62
33	38.64	26.09	35.19	0.68	0.65
34	42.16	29.44	41.06	0.70	0.67
35	46.12	33.30	48.03	0.72	0.70
36	50.59	37.75	56.31	0.75	0.73
37	55.63	42.92	66.19	0.77	0.75
38	61.35	48.93	78.03	0.80	0.78
39	67.87	55.96	92.25	0.82	0.81
40	75.31	64.20	109.41	0.85	0.84
41	83.86	73.90	130.22	0.88	0.87
42	93.71	85.38	155.55	0.91	0.90
43	105.11	99.02	186.54	0.94	0.93
44	118.37	115.31	224.64	0.97	0.97
45	133.88	134.88	271.76	1.01	1.00
46	152.10	158.51	330.35	1.04	1.04
47	173.64	187.21	403.67	1.08	1.07
48	199.26	222.31	496.01	1.12	1.11
49	229.93	265.51	613.16	1.15	1.15
50	266.89	319.07	762.89	1.20	1.19

+ USE ϕ_f , THE PHI ANGLE FOR FOUNDATION SOILS

If the groundwater is stable at an elevation between the leveling pad and a depth of 0.66*H*, an average unit weight should be used for γ_f. This is a fourth case condition. Note that the cohesion (c_f) of the foundation soil may change as the groundwater table rises.

Case 3: Permanent or intermittent groundwater is present in the retained soils above the leveling pad elevation (Figure 10-4).

$$Q_{ult} = c_f N_c + 0.5\, \gamma_{fl} B'_f\, N_\gamma + \gamma_f H_{emb} N_q \qquad \text{[Eq. 12-12C]}$$

If the groundwater level is at the finished grade at the toe of the wall, γ_{fl} is equal to γ_f. Note that the cohesion (c_f) of the foundation soil may change as the groundwater table rises.

For additional information on bearing capacity and effects of groundwater table on bearing capacity see Ref. 56.

12.3.4: Foundation Settlement Prediction

An assessment of the type, thickness and compressibility of proposed foundation soils should be conducted. Sufficient information is required to estimate maximum total and differential settlement during and after wall construction. Also, the geotechnical engineer should investigate for the presence of any potential collapsible soils in the vicinity of the SRW that could cause distress or failure to the structure.

A SRW will typically impose pressures on the foundation soils in excess of pre-construction activities that lead to compression of foundation materials. For cohesionless soils (i.e., sands and gravels), these settlements are typically small and occur mostly during construction. Saturated cohesive soils, on the other hand, may exhibit large time-dependent deformations. For most routine structures, conventional one-dimensional consolidation theory as presented in most geotechnical engineering textbooks [Refs. 4, 8, 17, 20 and 22 - 25] will give an acceptable estimate of potential settlements. The calculation of total and differential settlements due to footing loads applied to the foundation soils is complex and requires a thorough knowledge of the consolidation properties of site soils.

The dry-stack mortarless construction method for SRWs founded on an aggregate bearing pad and geogrid-reinforced backfill soil combine to create a flexible gravity structure that can tolerate large total settlements and moderate differential settlement. For most standard SRW units (< 2 sq ft (0.61 sq m) face area) a differential settlement of 1% is acceptable. In situations where large settlement and/or greater differential settlement than 1% is expected, special design steps should be taken.

12.3.5: Improving Foundations

Unsuitable foundation conditions at the planned base elevation of the wall can be improved by one or a combination of the following techniques:

- Excavate and replace unsuitable soils with adequate oversizing of the excavation.
- Locate base of SRW at competent soil.
- Expand the aggregate leveling pad width and thickness.
- Reinforce a thickened aggregate leveling pad with geogrid.
- Preload the area prior to wall construction.
- Preload wall prior to paving or building construction above wall.
- Employ soil improvement techniques: vibrocompaction, stone columns, dynamic compaction.

All areas below a SRW system that have bearing capacity or settlement issues should be addressed. In the case of reinforced SRWs, the reinforced soil zone may be adding as much new load to the foundation as the SRW units do at the face of the wall. So foundation materials below the reinforced soil zone may need to be improved as well as the area directly below the SRW unit wall face.

Section 12.4: Global Stability Around SRWs

A critical geotechnical assessment to be made for projects involving SRWs is the long-term slope stability (i.e., global stability) around the SRWs. The stability analysis should include the influence of all site geometry, soil and rock properties, existing and proposed loading, groundwater conditions, and existing or proposed slopes above and below the retaining wall.

A global stability failure involving a SRW is defined as the general mass movement of the structure and adjacent soil mass. Global stability concerns may result from changes in grade, weak soil layers, increase in groundwater elevation, and/or the additional gravitational forces imposed on the site soils as a result of construction. While the ultimate responsibility of each design profession is determined by their contract with the owner, it is recommended that the geotechnical engineer be responsible for the evaluation of the global stability of soil masses in and around SRWs as a required part of a geotechnical analysis just as it is for other types of structures.

A detailed presentation of slope stability methods can be found in many geotechnical engineering text books [Refs. 4, 8, 17, 20, 22, 23]. The analytical derivation for the equation defining factor of safety (FS_{global}) is based on force and moment equilibrium. Commercially available slope software that uses Bishop's method or other slope stability analysis methods is the typical means for evaluating global failure surfaces around retaining walls. The minimum design factor of safety against global instability recommended in this manual is 1.3.

Because SRW structures consist mostly of geogrid-reinforced soil, critical global failure surfaces may sometimes pass through a portion of a SRW. To analyze such failure surfaces accurately, the global analysis method and software should have the means to account for the SRW unit properties and the geogrid reinforcement layers. As a simplification, the SRW units are sometimes modeled as a soil zone having equivalent shear strength properties and horizontal width as the units. Methods for accounting for the geogrid reinforcement vary with global analysis methods and software. A global stability evaluation could account for geogrids in a method similar to this manual's much more limited Internal Compound Stability (ICS) analysis. ICS accounts for the geogrid as a resisting force as explained in Section 8.4, however, this possible similarity of ICS methods to global analysis methods should not be mistaken to indicate ICS is a global analysis. ICS, as defined in this manual, is much more limited than a global analysis and is not a substitute for a complete geotechnical global stability review.

12.4.1: Ensuring All Critical Failure Surfaces are Evaluated

Projects involving retaining walls can have complex site grading and geometry, so an important factor in a proper geotechnical evaluation is taking particular care to ensure that all potential global stability failure surfaces are analyzed and addressed in the vicinity of a SRW. Figure 12-2 summarizes common potential failure surfaces in and around a single height SRW. The failure surfaces that occur in the top slope independent of the wall (Surface A) or pass behind and below the SRW structure (Surfaces F, G) are labeled as global failure surfaces. It is recommended that these be analyzed by the geotechnical engineer per an acceptable slope stability analysis method.

In addition to global failure surfaces that pass behind and below the wall system, there are possible failure surfaces that start behind the wall system but then pass through some part of the wall system, sometimes referred to as compound failure surfaces. These failure surfaces should not be neglected in the global analysis, as they may be the most critical failure surfaces for some conditions. A failure surface that starts directly behind a SRW and exits out the face of the SRW, for a limited region behind the SRW (Surfaces B, C, D, E Figure 12-2), is labeled an "internal compound" failure in this manual. This Internal Compound Stability (ICS) analysis is part of this manual's recommended wall design methodology as described in Section 8. So some compound failure surfaces may be addressed by the SRW engineer as a part of their wall design.

The geotechnical engineer should be aware that an ICS analysis done by the SRW engineer ends a short distance behind the wall and only reviews surfaces that exit out the wall's face. Thus, a geotechnical engineer performing

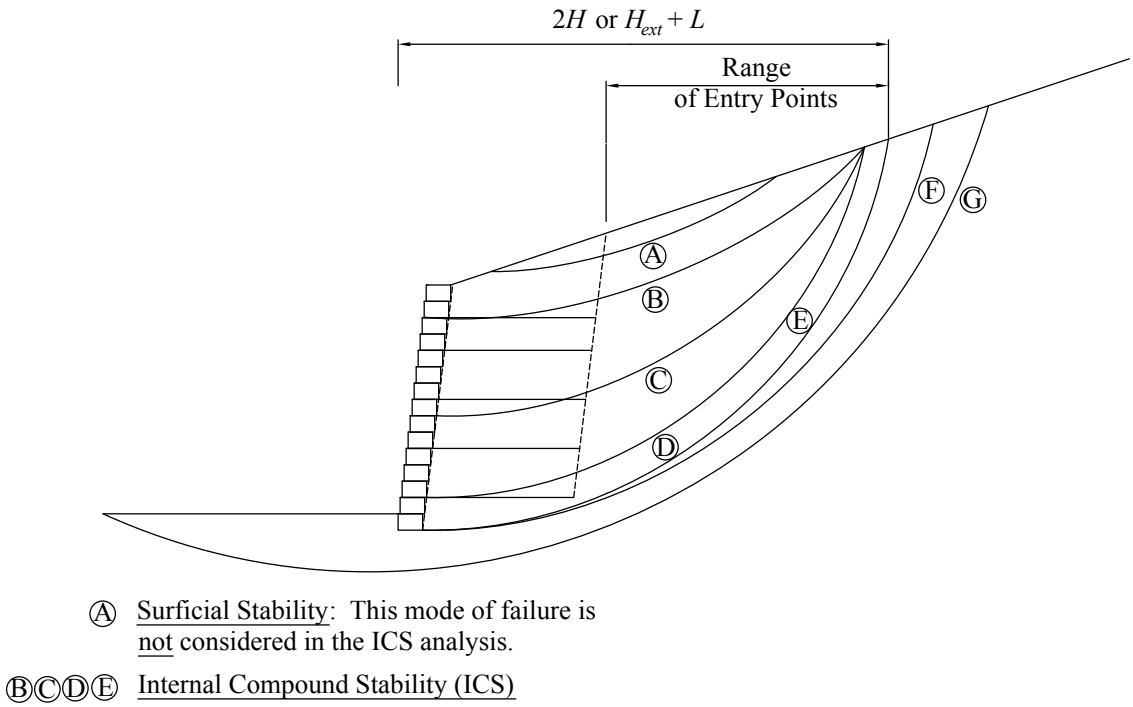

Figure 12-2: Potential Global Stability Failure Surfaces

a global analysis around a SRW should not neglect evaluating possible failure surfaces that either exit out the wall face but start well behind the wall or that pass through part of the reinforced soil zone but not through the wall face. Both these stated cases involve compound failures surfaces that ICS analysis does not address. The designer can, however, use the results of ICS to evaluate whether a global stability problem exists. As mentioned in Section 5.3.4, if all critical failure surfaces begin at the back limit of the design envelope, a comprehensive global stability analysis must be performed by the geotechnical engineer.

In addition, tiered or stacked walls can introduce many other possible compound and global failure surfaces. Commercially available global stability software that allows for accurate representation of these complex geometries and accounts for the wall face and geogrid reinforcements is the typical means of evaluating compound and global failure surfaces for tiered walls.

The number of possible failure surfaces shown in Figure 12-2 and the further complexities with tiered walls demonstrate the need for close coordination between the geotechnical engineer and the SRW engineer to ensure proper global stability analysis around SRWs. For this reason, this manual suggests in Section 3.3 that the geotechnical engineer be contracted by the owner to have clear, ultimate responsibility for global stability analyses for the project site, including in the vicinity of the SRW. As such, the duties that the geotechnical engineers are recommended to be contracted for should include: determining where and when global analysis is needed, ensuring that all critical failure surfaces are analyzed, and ensuring the proper soils and groundwater properties are used in these analyses.

12.4.2: Effect of Groundwater on Global Stability

Whenever the groundwater is within 0.66*H* of the bottom of the wall, the global stability of the SRW system should be analyzed to assure that an adequate factor of safety exists for deep failures that pass behind the geosynthetic

reinforcement and for compound failures that pass partially through the reinforced soil mass and partially behind the reinforced soil mass.

The global stability analysis result for a 24ft (7.3 m) high wall is illustrated in Figure 12-3A. No groundwater was assumed for this analysis and a minimum stability factor of safety was found. The effect of groundwater 6 ft (1.8 m) below the toe the wall on stability is illustrated in Figure 12-3B. The global/compound factor of safety drops to a value of 1.20 from the 1.31 value with no groundwater. The calculated factor of safety decreases further, to a value of 1.13, when the groundwater level is at the wall toe, as illustrated in Figure 12-3C. The presence of groundwater, whether at the toe or (as in this example) at a depth of $H/4$ is significant. The calculated factors of safety for the two groundwater cases are unacceptably low, and the wall design needs to be revised to achieve an acceptable level of safety against a global/compound failure–for both example cases.

12.4.3: Improving Slope Stability

In the event the soil around a SRW does not satisfy a minimum design factor of safety against global instability, the site civil engineer may be able to improve the slope stability by changing the wall height or layout, or the SRW engineer by increasing the embedment depth, H_{emb}, or changing the length, strength, or layer spacing of the geosynthetic reinforcement. Generally, the most efficient solution is to increase the geogrid length and/or strength to adequately intercept predicted failure surfaces behind the wall. Given re-designing the geogrid reinforcement is often the best option to address slope stability concerns, in such cases, the geotechnical engineer should closely coordinate with SRW engineer to ensure the wall design adequately addresses the potential global issues.

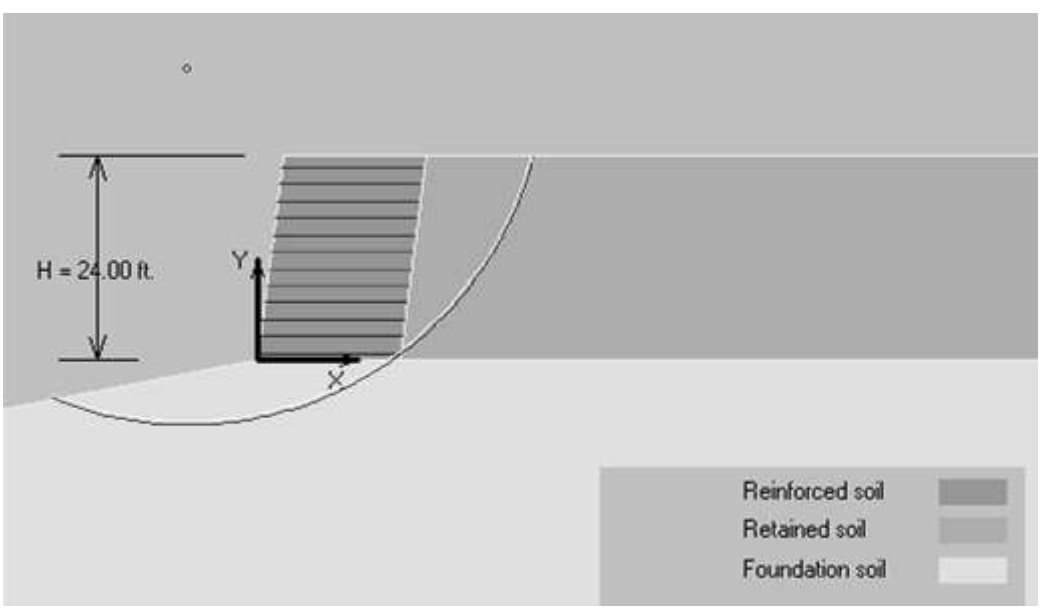

Figure 12-3A: Dry Condition, Minimum Global/Compound *FS* = 1.31

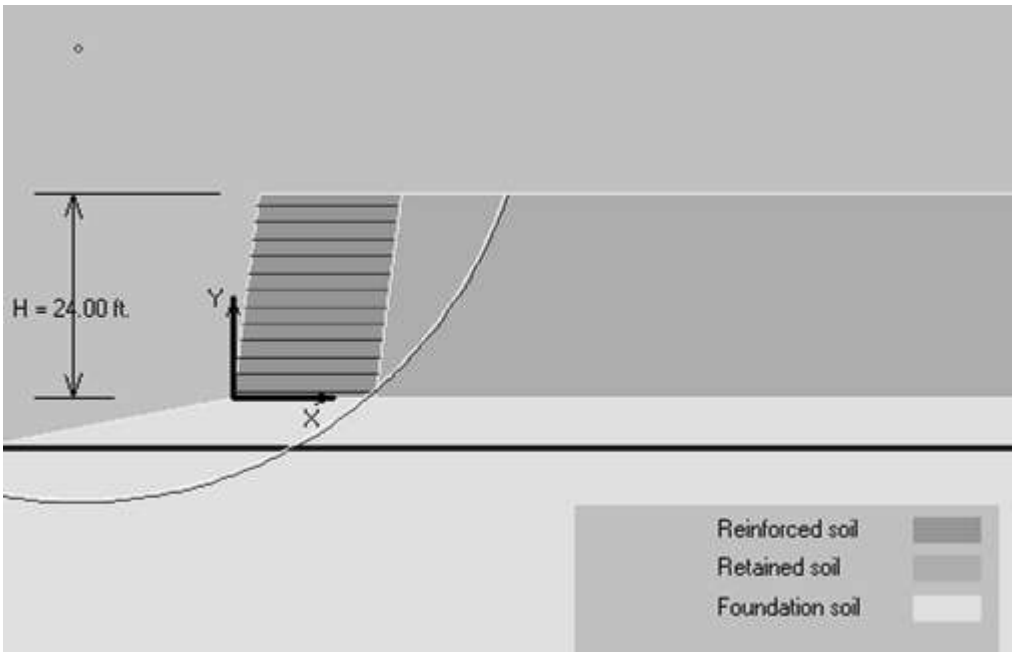

Figure 12-3B: Water Table 6 ft (1.8 m) Below Wall Toe, Minimum Global/Compound *FS* = 1.20

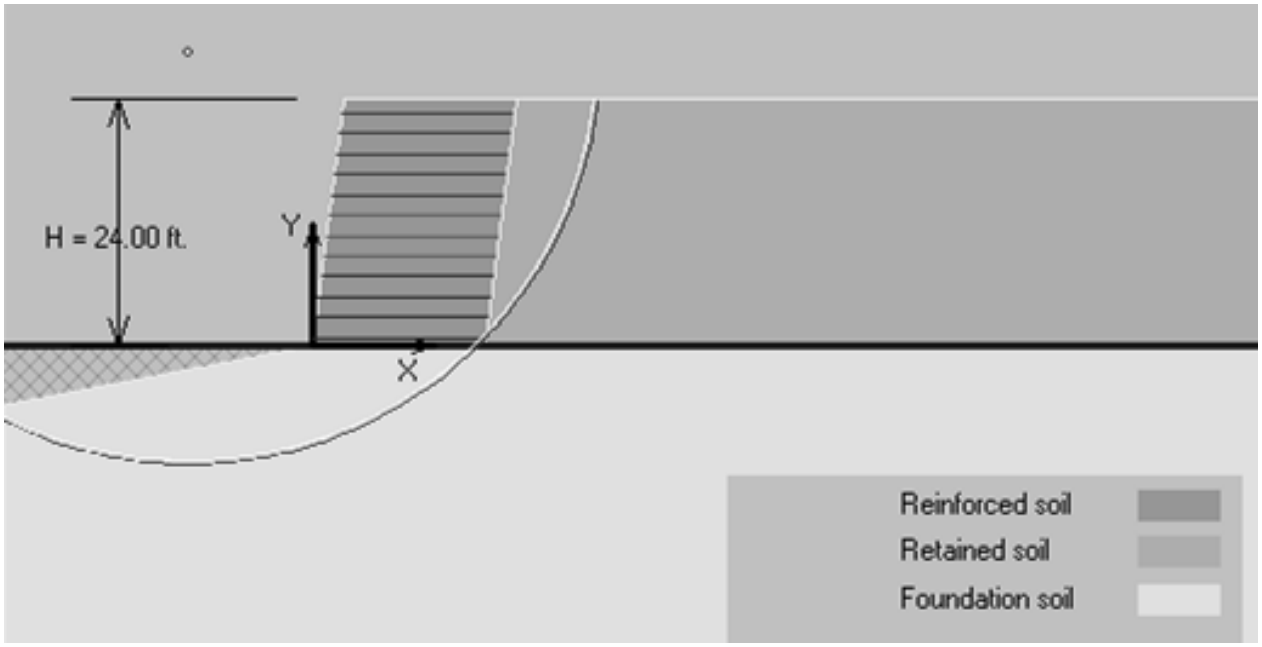

Figure 12-3C: Water Table at Wall Toe, Minimum Global/Compound *FS* = 1.13

SECTION 13
CONSTRUCTION OF SEGMENTAL RETAINING WALLS

In addition to proper engineering, long-term structural performance of SRWs is directly influenced by the construction procedures. By adhering to good construction practices SRWs can provide a long service life both functionally and aesthetically. Provided throughout this section are guidelines for the construction of SRWs that, by experience, have proven successful.

Section 13.1: Construction Drawings and Specifications

A successful project always begins with appropriate planning and scheduling. The preceding sections of this manual provide details on the engineering design of SRWs. By performing those engineering analyses, a set of construction plans can be generated detailing the specifics to build the SRW that should include:

- plan location of SRWs, including location limits of top and bottom of walls;
- profile dimensions, including elevations of top and bottom of wall and, for reinforced soil walls, elevations, strengths and lengths of reinforcement;
- typical cross-sections;
- drainage details, both surface and subsurface features;
- details (i.e., leveling pad, geosynthetic reinforcement to SRW unit connection for reinforced soil walls), wall abutment to other structures, wall termination, and geosynthetic layout around utilities or other obstructions, as applicable;
- construction specifications, consistent with the construction drawings.

Guide specifications for SRWs are provided in Section 14 of this design manual.

Section 13.2: Construction Details

The layout of curves and corners for SRWs requires planning by both the design engineer and contractor. The varying horizontal setback per course (Δ_u) among different types of SRW units must be considered prior to construction. This variable will dictate actual layout in plan and elevation. Leveling pad location will step up and back as elevation increases due to the horizontal setback per course (Δ_u). The setback and inclination angles also create larger or smaller radii (lengths of curved wall) as the SRW increases in height, depending upon either a concave or convex orientation. These potential changes in length and elevations must be accounted for in plan and field construction layout of the wall to assure the minimum radius is not encroached upon and that project requirements are met.

Caution should be exercised in leveling the leveling pad to ensure intimate contact between the units and aggregate. A designer or a contractor may opt to use an unreinforced concrete leveling pad on some projects. The potential disadvantages of using unreinforced concrete for the leveling pad are difficulty in layout of vertical and horizontal steps; and maintaining intimate contact between the leveling pad and SRW unit.

For reinforced soil walls, specific details on placement of geosynthetic reinforcement at wall corners should be provided in the construction drawings. Two typical details are provided as shown in Figures 13-1 and 13-2.

Occasionally, SRWs will encounter utilities or other features that must pass through, under, or within the reinforced soil zone. Special details should be presented in the construction drawings that incorporate the encroaching utility or feature. If the site planning process and time permits, routing utilities around the SRW may be the most prudent approach.

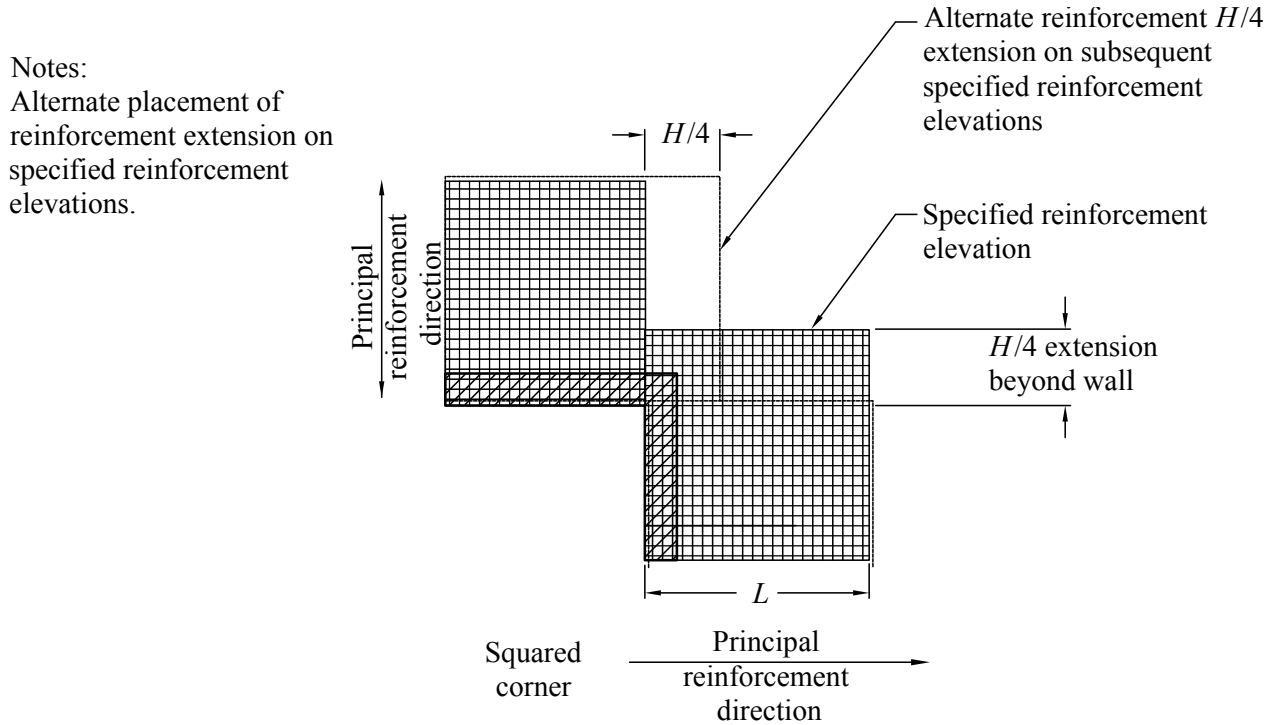

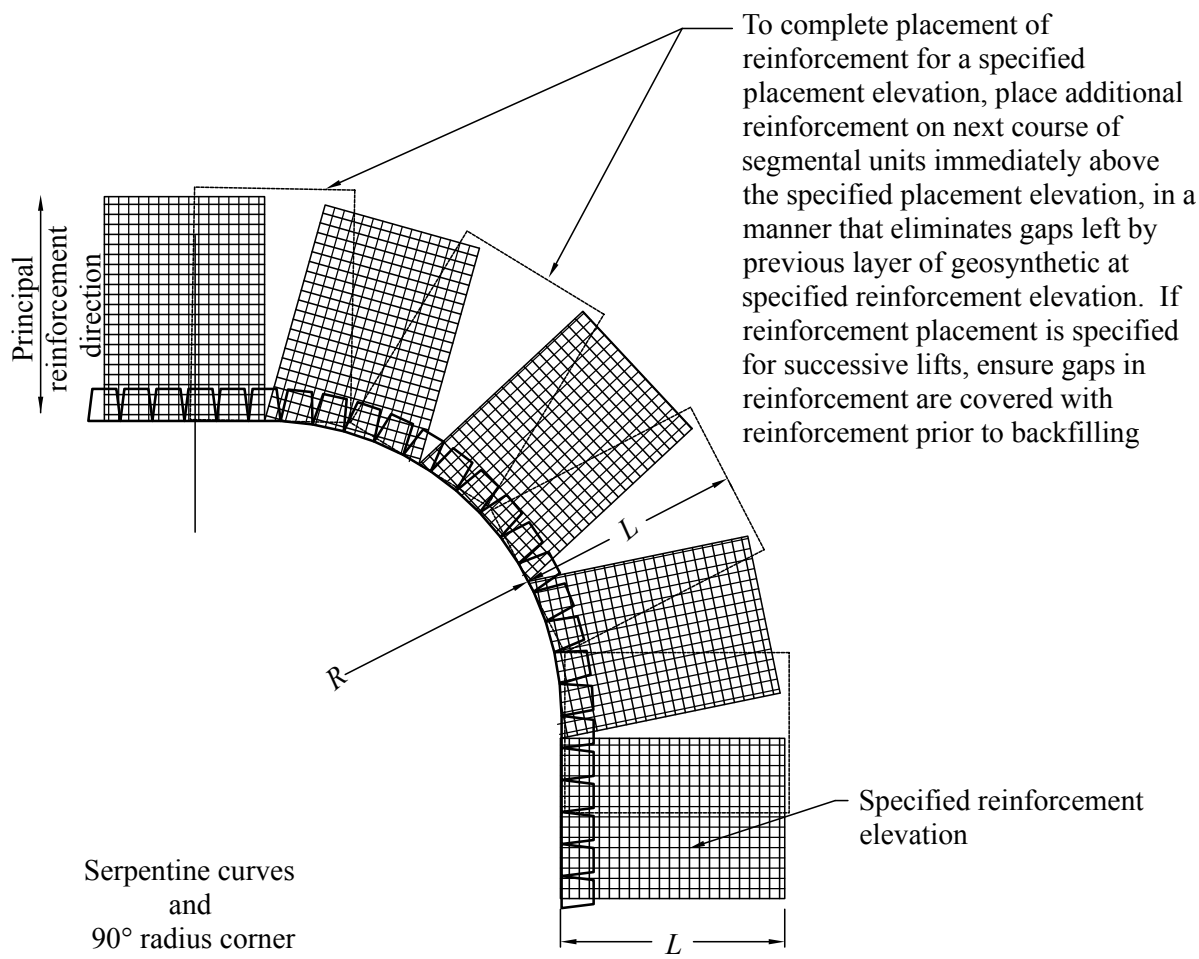

Figure 13-1: Reinforcement Placement for Concave Corners

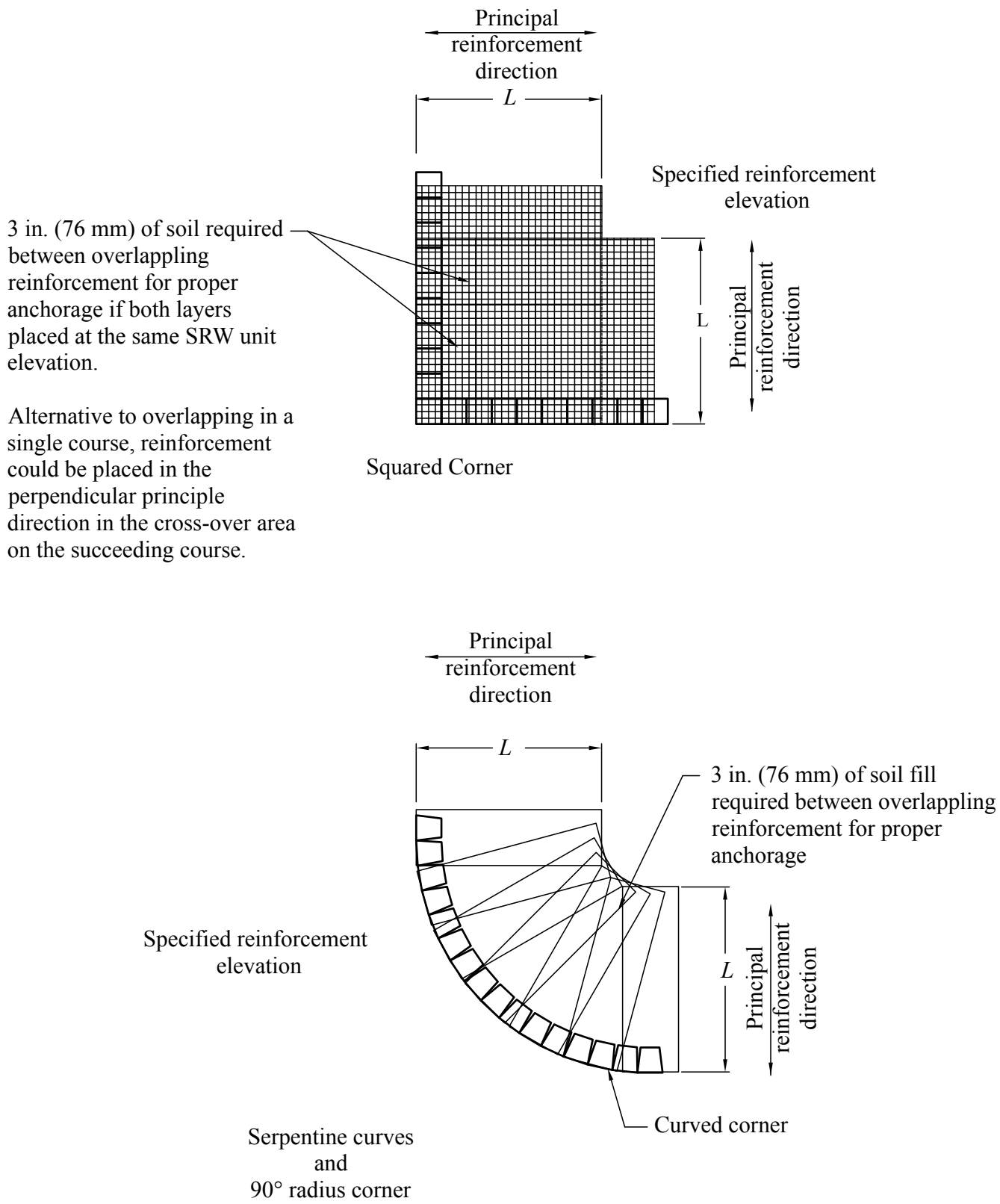

Figure 13-2: Reinforcement Placement for Convex Corners

Section 13.3: Construction Planning

The execution of construction operations for SRWs is dependent on quality surveying information, both to plan and field locate its proper position. The existing and proposed finish grades shown on the drawings should be verified in the field to ensure the planned design heights are in agreement with topographic information from the project grading plan. Once located in the field, it is good practice to have the retaining wall location verified by the owner or the owner's engineer. Any changes in wall location made in the field should be duly noted on as-built drawings prior to finishing the project.

Delivery and storage of all retaining wall materials should be coordinated to ensure maximum access to the work area and availability during construction. This is particularly important for soil used to construct the wall that may have to be placed with a specified moisture content. Likewise, the geosynthetic reinforcement should be stored according to the manufacturer's recommendations.

There are two basic topographical conditions in which SRWs may be constructed; "cut" and "fill". The differences between the two are illustrated in Figure 13-4A. The construction approach, schedule, and cost will be dictated by the type of wall that is required at a site. Additionally, the effects of construction on existing nearby structures and parking areas must be carefully considered for "cut" walls so that foundation support of those structures is not undermined or encroached upon in any way.

Section 13.4: Construction Sequence

The individual characteristics of various SRW units may dictate subtle differences in the construction sequence, however, all SRWs must generally follow these five basic steps in the construction process.

- General wall excavation and leveling pad construction-see Figure 13-4.
- Setting, leveling, and backfilling the first course of SRW units-see Figure 13-5.
- Placement and backfilling of SRW units-see Figure 13-6.
- Placement and tensioning of geosynthetic reinforcement-see Figure 13-7.
- Placement and compaction of reinforced backfill/retained soil in lifts not to exceed 8 in. (203 mm) in thickness.
- Capping the SRW and finish grading-see Figure 13-8.

By following these basic procedures, SRWs can be expected to perform well for the intended design life of the structure, however, to quantitatively evaluate the quality of the constructed SRWs, construction tolerances should be established.

Section 13.5: Construction Tolerances

Construction tolerances should be established prior to the start of construction so both the owner and the contractor will have the same understanding of what is an acceptable standard of work. These tolerances, normally outlined in the construction specifications, should provide a controllable construction erection margin for the contractor. Following are some typical tolerance guidelines.

13.5.1: Dimensional Tolerances for SRW Construction

As with any constructed works, some deviation from construction drawing alignments will occur. As opposed to cast-in-place concrete walls, alignment of SRWs can be simply corrected or modified during construction. Based upon examination of numerous completed SRWs, the following recommended maximum tolerances can be achieved with good construction techniques:

- Vertical control
  - ± 1.25 in. (32 mm) maximum over a 10 ft (3 m) distance; 3 in. (75 mm) maximum

- Horizontal location control
  straight lines: ± 1.25 in. (32 mm) over a 10 ft (3 m) distance; 3 in. (75 mm) maximum
- Rotation
  from established plan wall batter: ± 2 °

Horizontal and vertical control can be maintained by surveying the wall during construction. Control of wall rotation during construction can be influenced by SRW unit dimension tolerances, type of soil fill utilized, soil compaction techniques and the uniformity in geosynthetic tension applied during backfilling. Non-uniformity in manual pre-tensioning of the reinforcement may result in localized wall movement (i.e. bulging). Consistent construction techniques should be used throughout wall erection.

Careful planning and attention should be paid to the compaction equipment and procedures used during construction. Compaction within three feet of the front of wall face should be limited to hand operated equipment, preferably a vibrating plate compactor with a minimum weight of 250 lbs (113 kg). Light weight, low energy equipment should be used to compact the first three feet on reinforced fill. This does not, however, reduce the compaction density requirements in this zone. It is important that the soil within the first three feet is well compacted in order to minimize the potential of settlement of the reinforced fill directly behind the SRW units, which may cause the connection between the reinforcement and the SRW unit to be overstressed. The remainder of the reinforced soil zone can be compacted with walk-behind or riding self-propelled compaction equipment, depending upon soil type and available operating area. Non-uniform compaction procedures can result in vertical and horizontal alignment control problems. Upon completion of the wall, landscaping equipment and other vehicles should be kept at least five feet behind the wall face.

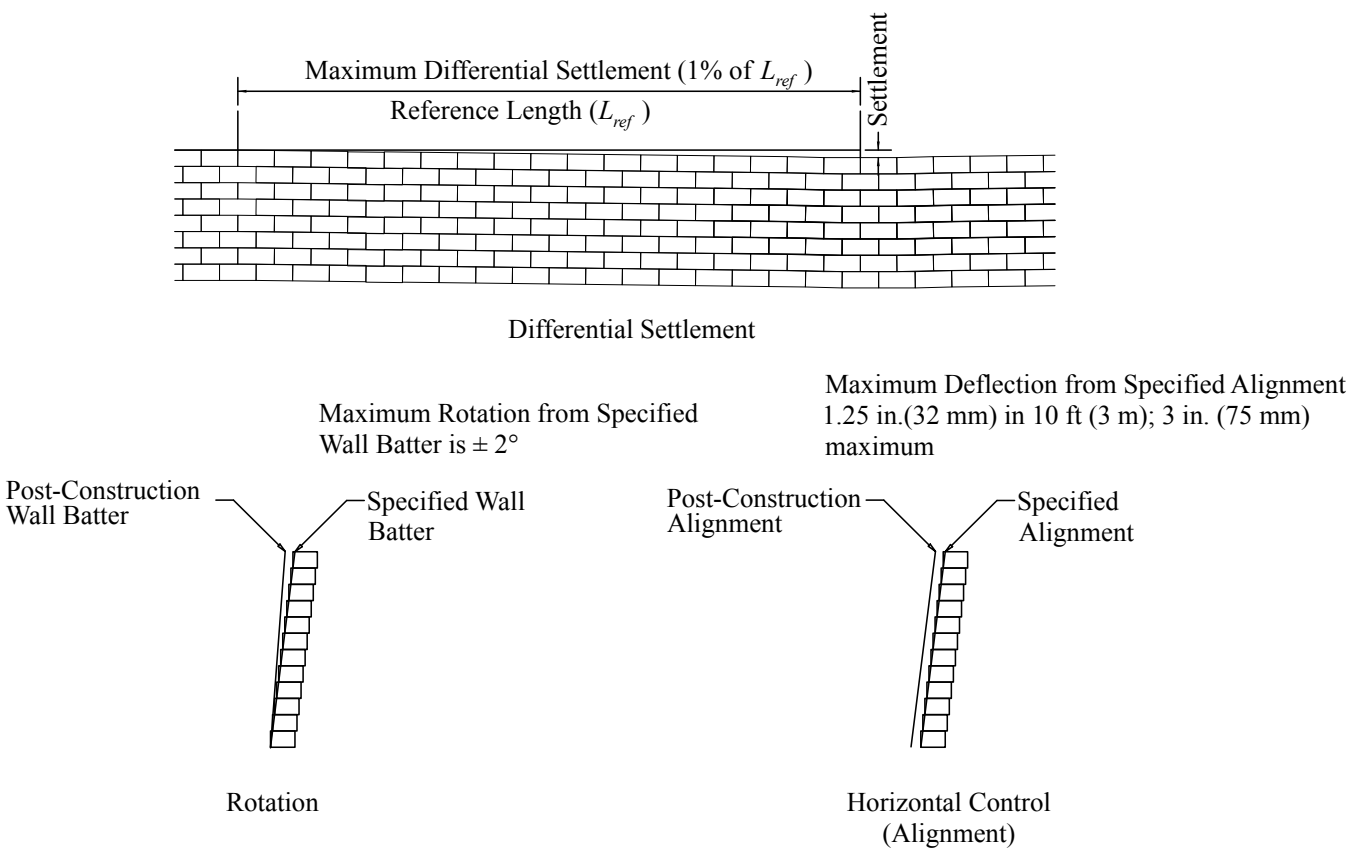

Figure 13-3: Recommended Maximum SRW Construction Tolerances

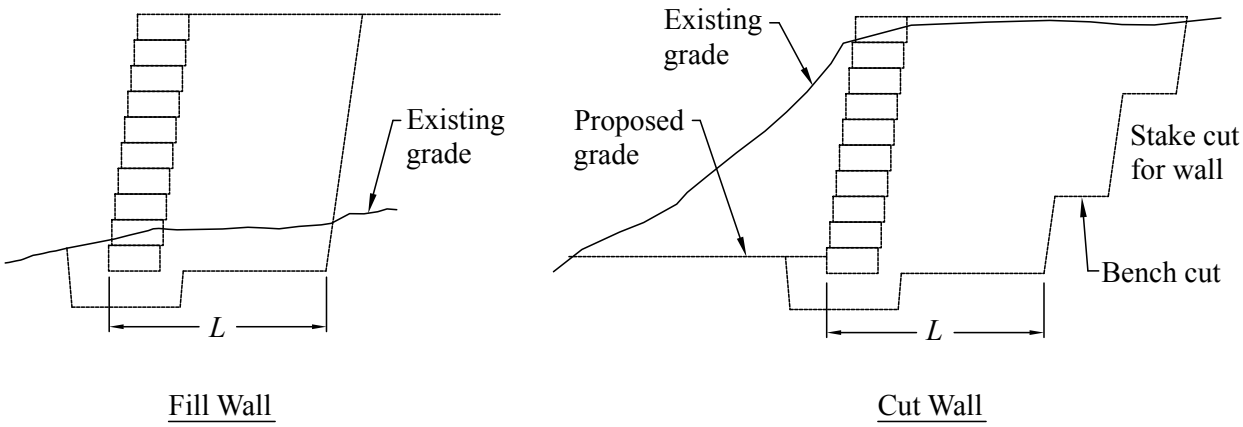

A. Wall Layout and General Excavation

1. Survey stake SRW location and general excavation limits for wall construction.
2. Ensure SRW is along proper alignment and within appropriate property boundries and construction easements.
3. Perform general excavation for wall.

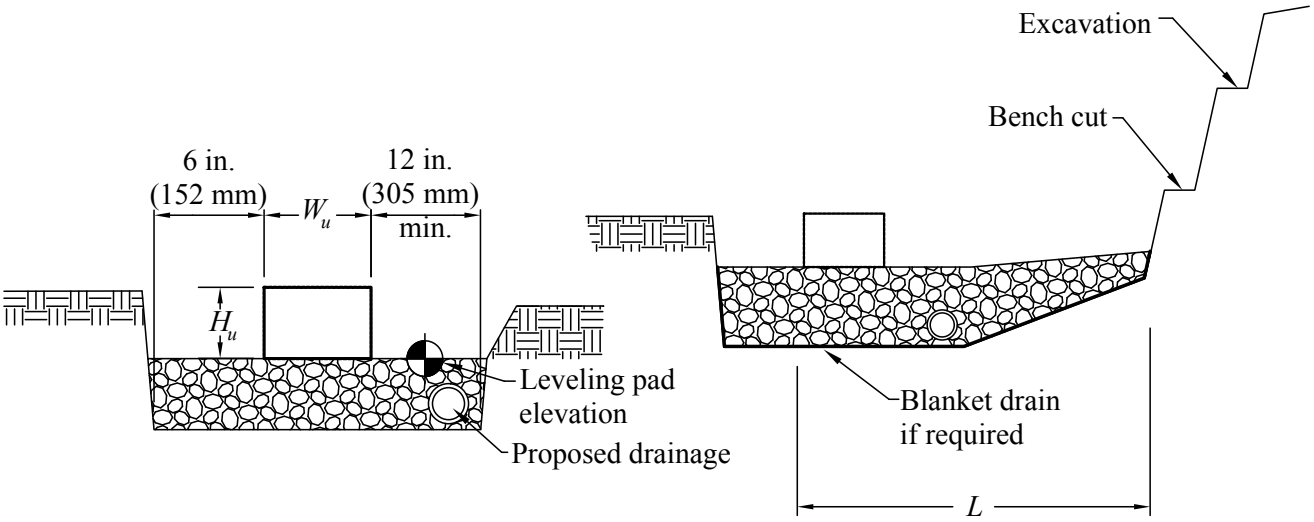

B. Leveling Pad Construction

1. Stake wall location for leveling pad excavation.
2. Excavate trench to create a minimum leveling pad thickness of 6 in. (152 mm) and to the minimum width shown.
3. Install drain pipe with positive gravity flow to outlet.
4. Place, level and compact leveling pad material for SRW units.
5. Place and compact aggregate blanket drain, install geotextile if required.

Figure 13-4: Construction Sequence Step 1–Excavation and Leveling Pad

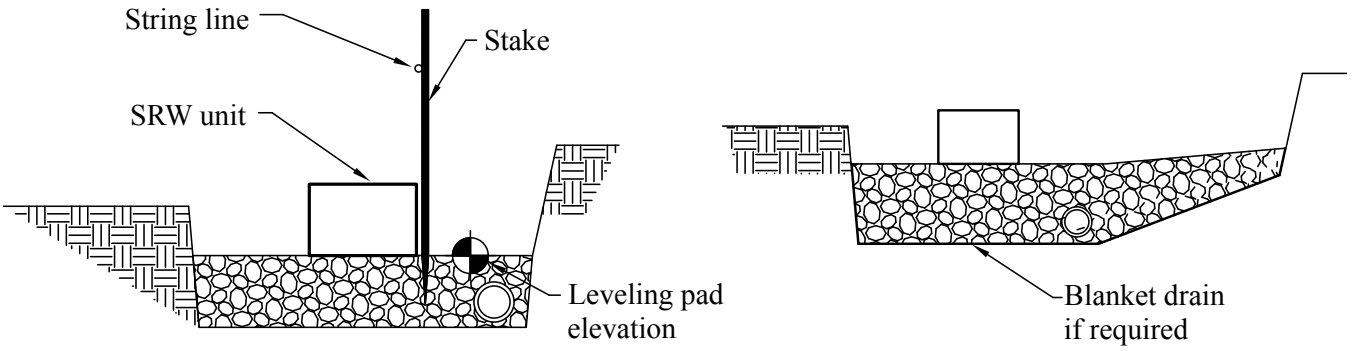

A. Setting First Course of SRW Units

1. Check leveling pad elevation and smooth leveling pad surface.
2. Stake and stringline the wall location, pay close attention to exact location of curves, corners, vertical and horizontal steps. String line must be along a molded face of the SRW unit, and not along a broken block finish surface.
3. Install first course of SRW units, checking level as placed.

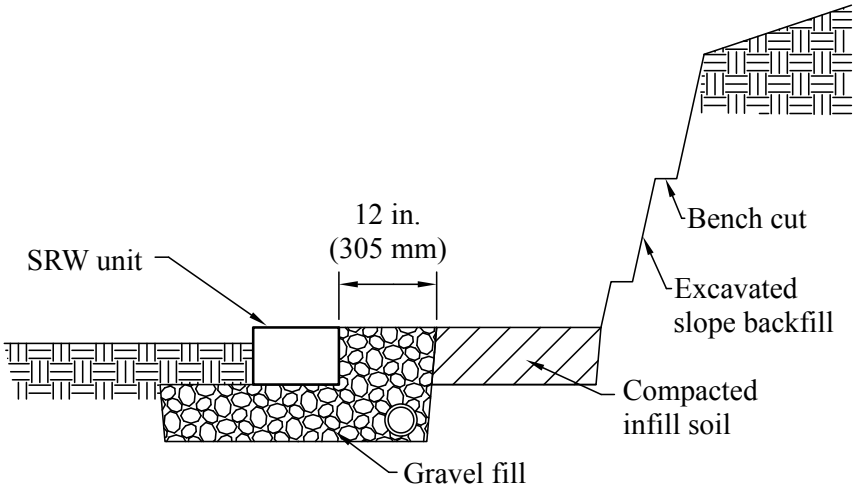

B. Backfilling First Course of SRW Units

1. Recheck wall location.
2. Use gravel fill to fill any openings in and between SRW units, as required.
3. Carefully place gravel fill behind and up to the height of SRW unit to create wall face drain. Install geotextile if required.
4. Place and compact infill soil behind wall drain.
5. Place fill soil in front of SRW unit.
6. Compact gravel fill and infill soil.

Figure 13-5: Construction Sequence Step 2–First Course of SRW Units

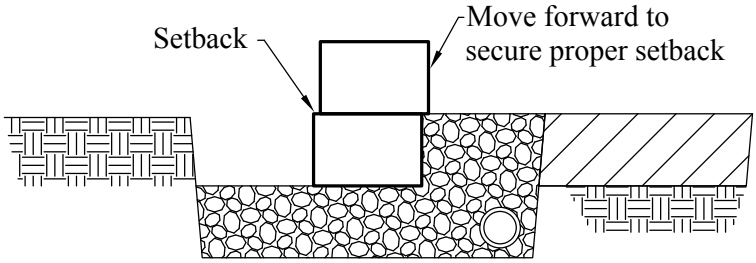

A. Installing Successive Courses of SRW Units

1. Ensure the gravel fill is level with, or slightly below the top of SRW unit below.
2. Clean debris off top of unit.
3. Place SRW unit shear connectors if applicable.
4. Move SRW unit to engage shear connectors and establish proper setback, consistent with manufacturer's recommendations.

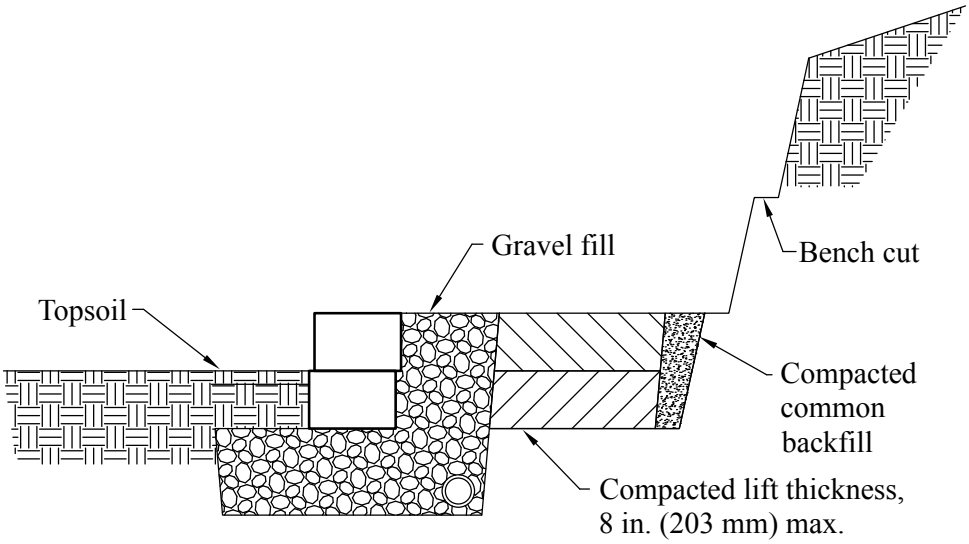

B. Fill Placement and Compaction

1. Use gravel fill to fill openings in and between SRW units as required.
2. Place gravel fill behind and up to height of SRW unit to continue wall face drain. Install Geotextile if required.
3. Place and compact infill soil behind wall drain.
4. Compact gravel fill and infill soil.

Figure 13-6: Construction Sequence Step 3–Placement and Backfilling of SRW Units

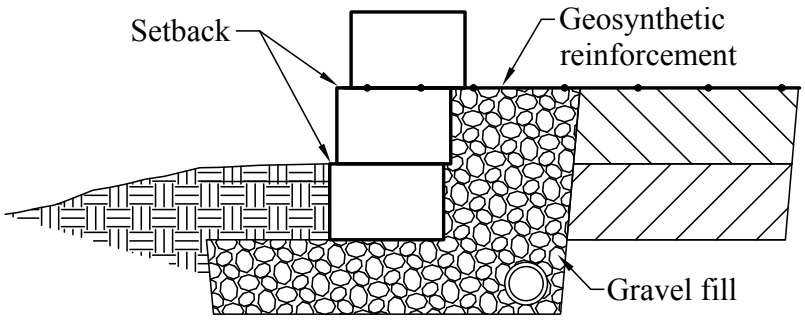

A. Placement of Geosynthetic Reinforcement

1. Ensure wall face gravel fill is level with, or slightly above the top of SRW unit.
2. Clean debris off top of unit.
3. Cut geosynthetic reinforcement to design length *L* as shown on plans and install with strength direction perpendicular to wall face.
4. Place shear connectors, if applicable, as recommended by the manufacturer.
5. Place SRW unit on top of geosynthetic.
6. Move SRW unit to engage shear connectors and establish proper setback.

Notes:
1. Sequence of backfilling steps may vary and are dependent on type of SRW unit and geosynthetic reinforcement used.
2. Alignment of straight walls should be check every other course.

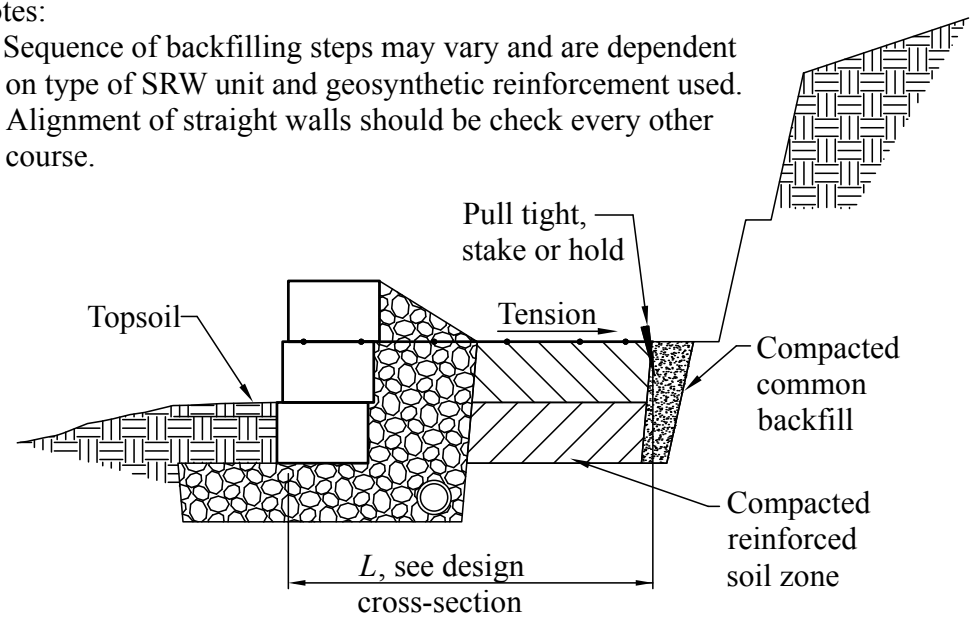

B. Backfilling over Geosynthetic Reinforcement

1. Pull geosynthetic reinforcement taut, using uniform tension, hold or stake to maintain tension throughout fill placement process.
2. Place gravel fill for wall face drain in and between SRW units as required.
3. Place infill soil.
4. Compact infill soil.
5. Compact gravel fill.
6. Place remainder of gravel fill.

Figure 13-7: Construction Sequence Step 4–Geosynthetic Reinforcement Installation

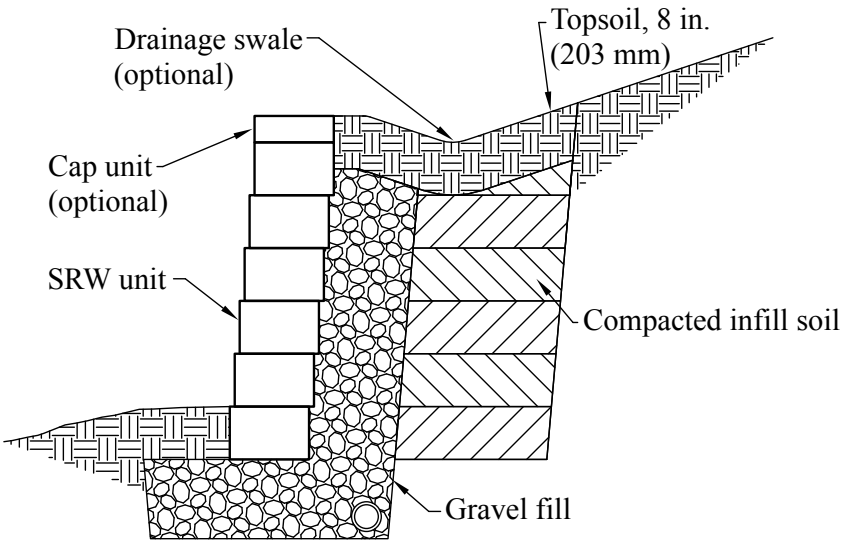

A. Completed Gravity SRW

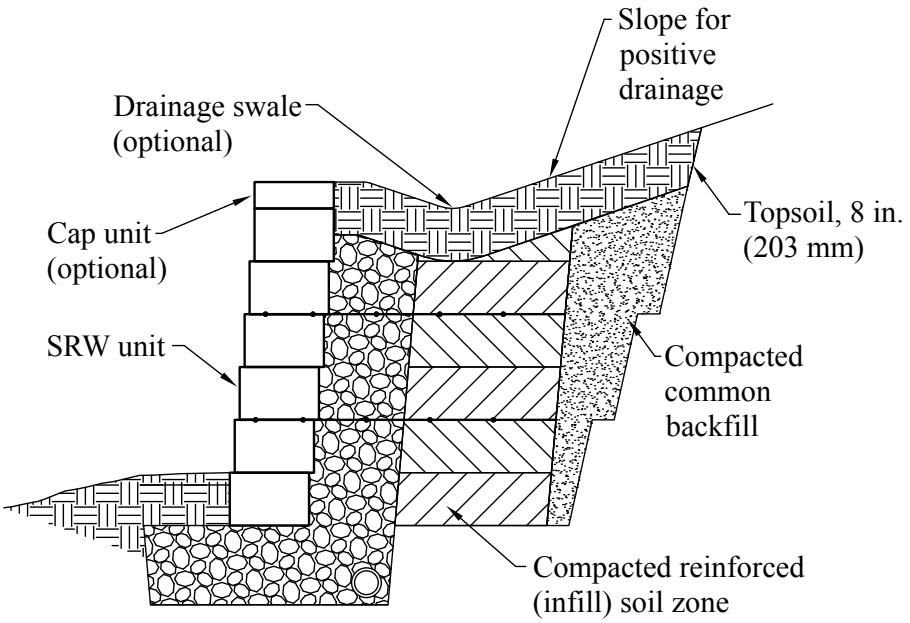

B. Completed Reinforced SRW

1. Continue wall to full height using steps A and B from Figures 13-6 and 13-7.
2. Install SRW cap/coping unit (optional), secure per manufacturer's recommendations.
3. Place and compact final backfill.
4. Finish grade for positive drainage away from wall face, drainage swale is optional.
5. Place topsoil and vegetate slopes above and around wall terminations.

Figure 13-8: Construction Sequence Step 5–Capping and Grading

13.5.2: Materials Acceptance

SRW units and geosynthetic reinforcement materials delivered to the site should be accompanied with a manufacturer's certification indicating the material meets or exceeds specified minimum physical properties. The SRW specifications should clearly state the minimum physical properties of the SRW units and the geosynthetic reinforcement manufacturer should have submitted an established correlation between design properties and index/physical properties. Materials below the required strengths, index properties and/or dimensions may be rejected as unsuitable. There are provisions in ASTM C1372 to evaluate materials with regard to appearance or inability to perform or be utilized in construction.

13.5.3: Earthwork Monitoring and Testing

A geotechnical engineer should inspect and test the wall foundation and cut areas after excavation is completed to assure that design bearing conditions are met and verify groundwater design assumptions. The geotechnical engineer should also monitor fill placement and test compacted soil materials to ensure proper soil type and compaction specifications are being achieved. Typically, compaction requirements are 95% of maximum standard Proctor dry density (ASTM D 698 [Ref. 75] or AASHTO T-99) or 90 to 92% of maximum modified Proctor dry density (ASTM D 1557 [Ref. 76] or AASHTO T-180). The moisture content for compaction should be controlled within minus three to plus one percentage points of the optimum moisture content, for most soils. Finished lift thickness should not exceed the height of unit H_u and should be limited to 6 to 8 in. (152 to 203 mm) for clean granular or fine grained (i.e., clay, clayey, silt and silty) soils. For units smaller than 6 in. (152 mm), utilize some convenient multiple of unit height without exceeding the maximum.

Tolerances for the soils related construction operations of SRWs are usually controlled to meet a minimum requirement as stated above. Since the entire SRW design is predicated on the soil strength parameters, complete and thorough earthwork construction is essential to achieve satisfactory long-term performance of the SRW system. The geotechnical engineer should have final control over the suitability of soil and earthwork operations for the SRW construction.

13.5.4: Geosynthetic Reinforcement

The owner's engineer should verify the reinforcement location, elevation, length and tensioning of the geosynthetic reinforcement in addition to ensuring that the material meets or exceeds specified minimum property requirements. Since geosynthetic reinforcement type, grade, or lengths may change across the extent and height of the wall, competent construction monitoring should verify that the contractor's placement of geosynthetic reinforcement is in accordance with construction plans and specifications.

13.5.5: Gapping and Cracking of Concrete Units

It is not uncommon for blocks to crack and/or gap, especially at the location of tight outside radii. Small amounts of movements in the face are not necessarily a sign of imminent failure, especially if horizontal and vertical alignment is maintained. Precautions can be taken to help reduce cracking and gapping. The most effective precaution is to provide a thicker gravel fill area directly behind the block in the area of the radius.

13.5.6: Incidental Movement

Sometimes small movements are an indicator that water is infiltrating the reinforced mass and should be reviewed. If more than incidental water is infiltrating the reinforced mass and has not been accounted for in the design, steps should be taken to identify the source and redirect the water away from the wall and reinforced mass. Some movement may be anticipated, especially in the first eighteen months after construction.

Section 13.6: Post Construction Activities

Retaining walls are often the first structures to be constructed, especially on newly developed sites. Construction of building structures, roads, parking areas, and utilities (to name a few) usually follow weeks, sometimes months after the completion of the wall. This sometimes leads to unforeseen conditions at both the top and toe of the wall. Long-term storage of materials and equipment directly behind the wall, excavation at the top and toe of the wall, blocked drainage outlet structures, and clogged sediment control features are all examples of post retaining wall construction activities that may negatively affect the stability of the wall. Unfortunately, the SRW engineer and retaining wall installer are no longer present on site to monitor these activities, so it becomes the responsibility of the owner or his representative to ensure that activities that can lead to such problems do not occur.

SECTION 14
SAMPLE SPECIFICATIONS

The following sample specification illustrates a method of incorporating a SRW into a construction project. Traditional method and materials specifications designating material and installation requirements are presented in Section 14.1. Specifications for segmental retaining wall units, geosynthetic reinforcement and gravel fill are presented. The method specification approach requires that a site specific design be performed by the owner's engineer. Designs should be performed such that specified SRW and geosynthetic material properties can be met by a number of manufacturer's products using the properties of the project soils. SRW and geosynthetic properties are then specified as the minimum properties that must be met. The advantage of this type of specification is that the owner's engineer is in control of the design.

Section 14.1: Material Specification

For clarity, the following sample specifications were kept in inch-pound units, please refer to the conversion tables to transform to metric system.

A method specification for construction of segmental retaining walls follows. The SRW unit and gravel fill specifications are applicable to both conventional and reinforced soil walls. The geosynthetic reinforcement specification is only applicable to reinforced soil walls.

Shaded areas of text indicate project-specific data should be inserted at these locations by the specifier/designer.

SPECIFICATION FOR SEGMENTAL RETAINING WALL MATERIALS

PART 1: GENERAL

1.01 Description

Work shall consist of furnishing all materials, labor, equipment, and supervision to install a segmental retaining wall system in accordance with these specifications and in reasonably close conformity with the lines, grades, design and dimensions shown on the plans or as established by the Owner or Owner's Engineer.

1.02 Related Work

A. Section _____ Section–Information Available to Bidders: Geotechnical Report
B. Section _____ Section–Testing and Inspection Services
C. Section _____ Section–Site Preparation
D. Section _____ Section–Earthwork

1.03 Reference Standards

A. Engineering Design
1. *NCMA Design Manual for Segmental Retaining Walls 3rd Edition*
2. ASTM D 6638 – *Standard Test Method for Determining the Connection Strength Between Geosynthetics Reinforcement and Segmental Concrete Units* [Ref. 70]
3. ASTM D 6916 – *Standard Test Method for Determining the Shear Strength Between Segmental Concrete Units* [Ref. 71]

B. Segmental Retaining Wall Units
1. ASTM C 140 – *Standard Test Methods for Sampling and Testing Concrete Masonry Units and Related Units* [Ref. 78]
2. ASTM C 1262 – *Standard Test Method for Evaluating the Freeze-Thaw Durability of Manufactured Concrete Masonry Units and Related Concrete Units* [Ref. 79]
3. ASTM C 1372 – *Standard Specification for Dry-Cast Segmental Retaining Wall Units* [Ref. 80]

C. Geosynthetic Reinforcement
1. ASTM D 4595 – *Standard Test Method for Tensile Properties of Geotextiles by the Wide-Width Strip Method* [Ref. 81]
2. ASTM D 5262 – *Standard Test Methods for Evaluating the Unconfined Tension Creep and Creep Rupture Behavior of Geosynthetics* [Ref. 82]
3. ASTM D 5321 – *Standard Test Method for Determining the Coefficient of Soil and Geosynthetic or Geosynthetic and Geosynthetic Friction by the Direct Shear Method* [Ref. 83]
4. ASTM D 5818 – *Standard Practice for Exposure and Retrieval of Samples to Evaluate Installation Damage of Geosynthetics* [Ref. 84]
5. ASTM D 6637 – Standard Test Method for Determining Tensile Properties of Geogrids by the Single or Multi-Rib Tensile Method [Ref. 85]
6. ASTM D 6706 – *Standard Test Method for Measuring Geosynthetic Pullout Resistance in Soil* [Ref. 86]
7. ASTM D 6992 – *Standard Test Method for Accelerated Tensile Creep and Creep-Rupture of Geosynthetic Materials Based on Time-Temperature Superposition Using Stepped Isothermal Method* [Ref. 110]

D. Soils

1. ASTM D 422 – *Standard Test Method for Particle-Size Analysis of Soils* [Ref. 87]
2. ASTM D 698 – *Standard Test Method for Laboratory Compaction Characteristics of Soil Using Standard Effort (12 400 ft-lbf/ft^3(600 kN-m/m^3))* [Ref. 75]
3. ASTM D 1556 – *Standard Test Method for Density and Unit Weight of Soil in Place by the Sand-Cone Method* [Ref. 88]
4. ASTM D1557 – *Standard Test Method for Laboratory Compaction Characteristics of Soil Using Modified Effort (56,000 ft-lbf/ft^3 (2,700 kN-m/m^3))* [Ref. 76]
5. ASTM D 2487 – *Standard Practice for Classification of Soils for Engineering Purposes (Unified Soil Classification System)* [Ref. 89]
6. ASTM D 6938 – *Standard Test Method for In-Place Density and Water Content of Soil and Soil-Aggregate by Nuclear Methods (Shallow Depth)* [Ref. 90]
7. ASTM D 4318 – *Standard Test Methods for Liquid Limit, Plastic Limit, and Plasticity Index of Soils* [Ref. 91]
8. ASTM D 6913 – *Standard Test Methods for Particle-Size Distribution (Gradation) of Soils Using Sieve Analysis* [Ref. 92]
9. ASTM G 51 – *Standard Test Method for Measuring pH of Soil for Use in Corrosion Testing* [Ref. 93]

E. Drainage Pipe

1. ASTM F 405 – *Standard Specification for Corrugated Polyethylene (PE) Pipe and Fittings* [Ref. 94]
2. ASTM F 758 – *Standard Specification for Smooth-Wall Poly(Vinyl Chloride) (PVC) Plastic Underdrain Systems for Highway, Airport, and Similar Drainage* [Ref. 95]

F. Where specifications and reference documents conflict, the Owner's Engineer shall make the final determination of applicable document.

1.04 Approved Segmental Retaining Wall Systems

A. Suppliers of segmental retaining wall system material components shall have demonstrated experience in the supply of similar size and types of segmental retaining walls on previous projects, and shall be approved by the Owner's Engineer. Each supplier must be approved two weeks prior to bid opening. Suppliers currently approved for this work are:

Segmental Wall Units

1. _____
2. _____
3. _____

Geosynthetic Reinforcements

1. _____
2. _____
3. _____

1.05 Submittals

A. Material Submittals – The Contractor shall submit manufacturer's certifications, 30 days prior to the start of work, stating that the SRW units, geosynthetic reinforcement, reinforced backfill, and gravel fill meet the requirements of Part 2.0 of this specification. The Contractor shall provide a list of successful projects with references showing that the installer for the segmental retaining wall is qualified and has a record of successful performance.

1.06 Delivery, Storage, and Handling

A. The Contractor shall inspect the materials upon delivery to assure that proper type and grade of material has been received.

B. The Contractor shall store and handle materials in accordance with manufacturer's recommendations and in a manner to prevent deterioration or damage due to moisture, temperature changes, contaminants, corrosion, breaking, chipping or other causes.

C. The Contractor shall protect the materials from damage. Damaged material shall not be incorporated into the segmental retaining wall.

PART 2: MATERIAL

2.01 Concrete Segmental Retaining Wall Units

A. Concrete segmental units shall conform to the requirements of ASTM C 1372 [Ref. 80] and have a minimum net average 28 days compressive strength of 3,000 psi and a maximum absorption of 13 pcf (for normal weight) as determined in accordance with ASTM C 140 [Ref. 78]. For areas subject to detrimental freeze-thaw cycles, as determined by the Owner or Owner's Engineer, the concrete shall have adequate freeze/thaw protection and meet the requirements of ASTM C 1372 [Ref. 80] when tested in accordance with ASTM C1262 [Ref. 79].

B. All units shall be sound and free of cracks or other defects that would interfere with the proper placing of the unit or significantly impair the strength or permanence of the construction. Any cracks or chips observed during construction shall fall within the guidelines outlined in ASTM C 1372 [Ref. 80].

C. SRW units dimensions shall not differ more than $\pm$ 1/8 in., as measured in accordance with ASTM C140 [Ref. 78]. This tolerance does not apply to architectural surfaces, such as split faces.

D. SRW units shall match the color, surface finish, and dimension for height, width, depth, and batter as shown on the plans.

E. If pins or clips are used by the retaining wall supplier to interconnect SRW units, they shall consist of a nondegrading polymer or galvanized steel and be made for the express use with the SRW units supplied.

F. Cap adhesive shall meet the requirements of the SRW unit manufacturer.

2.02 Geosynthetic Reinforcements

A. Geosynthetic Reinforcements shall consist of high tenacity PET geogrids, HDPE geogrids, or geotextiles manufactured for soil reinforcement applications. The type, strength and placement location of the reinforcing geosynthetic shall be as shown on the plans. The design properties of the reinforcement shall be determined according to the procedures outlines in this specification and the NCMA Design Manual for Segmental Retaining Walls (3rd Edition, 2009) Detailed test data shall be submitted to the Owner's Engineer for approval at least 30 days prior to construction and shall include tensile strength (ASTM D 4595 [Ref. 80] or ASTM D 6637 [Ref. 85]), creep (ASTM D 5262 [Ref. 82]), site damage (ASTM D 5818 [Ref. 84]), durability (FHWA guidance (FHWA NHI-00-043, FHWA NHI-00-044)), pullout (ASTM D 6706 [Ref. 86]), direct shear (ASTM D 5321 [Ref. 74] and connection (ASTM D 6638 [Ref. 70]) test data.

Included with the raw test data shall be a report that shows that the proposed geosynthetic reinforcements have the following minimum properties:

Property	Geosynthetic Reinforcement				
	Type 1		Type 2		Type 3
Long-Term Design Strength - LTDS (lb/ft)					
Coefficient of Pullout Interaction C_i					
Coefficient of Direct Sliding - C_{ds}					

Calculation of the allowable reinforcement tension shall use the following method:

The Long-Term Design Strength (*LTDS*) at the end of the service life shall consider the time-temperature creep rupture characteristics of the reinforcement, environmental degradation, construction induced damage, and an overall factor of safety.

$$LTDS = \frac{T_{ult}}{RF_D \times RF_{ID} \times RF_{CR}}$$

where:

T_{ult} = Ultimate (or yield tensile strength) from wide width tensile strength tests (ASTM D 6637 [Ref. 85] for geogrids or ASTM D 4595 [Ref. 80] for geotextiles), based on minimum average roll value (MARV) for the product.

RF_D = Durability reduction factor is dependent on the susceptibility of the geosynthetic to attack by microorganisms, chemicals, thermal oxidation, hydrolysis and stress cracking, and can vary typically for 1.05 to 2.0. The minimum reduction factor shall be 1.05.

RF_{ID} = Installation damage reduction factor can range from 1.05 to 3.0, depending on backfill gradation and product mass per unit weight. The minimum reduction factor shall be 1.1 to account for testing uncertainties.

RF_{CR} = Creep reduction factor is the ratio of the ultimate strength (T_{ult}) to the creep limited strength from laboratory creep tests for each product or product family, and can vary typically from 1.50 to 5.0.

In no case shall the product $RF_{ID} \times RF_D \times RF_{CR}$ be less than 2.0.

2.03 Drainage Pipe

A. The drainage collection pipe shall be a perforated or slotted PVC or corrugated HDPE pipe. The pipe and gravel fill may be wrapped with a geotextile that will function as a filter.

B. Drainage pipe shall be manufactured in accordance with ASTM F 405 [Ref. 94] or ASTM F 758 [Ref. 95].

2.04 Gravel fill

Gravel fill shall be a clean crushed stone or granular fill meeting the following gradation as determined in accordance with ASTM D 422 [Ref. 87]:

Sieve Size	Percent Passing
1 in.	100
3/4 in.	75 - 100
No. 4	0 - 60
No. 40	0 - 50
No. 200	0 - 5

2.05 Reinforced Backfill

A. The reinforced backfill shall be free of debris and consist of one of the following inorganic USCS soil types: GP, GW, SW, SP, SM, meeting the following gradation as determined in accordance with ASTM D 422 [Ref. 87].

Sieve Size	Percent Passing
1 in.	100
No. 4	100 - 20
No. 40	0 - 60
No. 200	0 - 35[1]

The maximum size should be limited to 1.0 in. for geosynthetic reinforced soil SRWs unless tests have been performed to evaluate potential strength reduction in the geosynthetic due to installation damage.

The plasticity of the fine fraction of the reinforced soil shall be less than 20[2].

B. The pH of the backfill material shall be between 3 and 9 when tested in accordance with ASTM G 51 [Ref. 93].

2.06 Geotextile Filter

Drainage geotextile shall have the following minimum properties or shall meet the criteria recommended by the Wall Design Engineer.

AOS	ASTM D 4751 [Ref. 96]
Grab Tensile	ASTM D 4632 [Ref. 97]
Trap Tear	ASTM D 4533 [Ref. 98]
Water Flow Rate	ASTM D 4491 [Ref. 99]
Puncture	ASTM D 4833 [Ref. 100]

[1] Cohesionless, coarse-grained soils, are preferred; finer soils with low-plasticity (i.e., PI of the finer fraction is less than 20) may be used provided the following four additional design criteria are implemented:
(a) Proper internal drainage is installed.
(b) Only soils with low to moderate frost heave potential are utilized.
(c) The internal cohesive shear strength parameter *c* is conservatively ignored for stability analysis.
(d) The final design for critical walls is checked by a qualified geotechnical engineer to ensure that the use of cohesive soils does not result in unacceptable time-dependent movement of the SRW system.

[2] For taller applications the PI may be reduced to PI < 5 to 10.

PART 3: CONSTRUCTION

3.01 Construction Observation

A. The Owner or Owner's Engineer should verify the materials supplied by the contractor meet all the requirements of the specification. This includes all submittals and proper installation of the system.

B. The Contractor's field construction supervisor shall have demonstrated experience and be qualified to direct all work at the site.

3.02 Excavation

A. The Contractor shall excavate to the lines and grades shown on the plans. The Contractor shall take precautions to minimize over-excavation. Excavation support, if required, shall be designed by the Contractor.

3.03 Foundation Preparation

A. Following excavation for the leveling pad and the reinforced soil zone, foundation soil shall be examined by the Owner's Geotechnical Engineer to assure the actual foundation soil strength meets or exceeds the assumed design bearing strength. Soils not meeting the required strength shall be removed and replaced with soil meeting the design criteria, as directed by the Owner's Geotechnical Engineer.

3.04 Leveling Pad Preparation

A. A minimum 6 in. thick layer of compacted granular material shall be placed for use as a leveling pad up to the grades and locations as shown on the construction drawings. The granular base shall be compacted to provide a firm, level bearing pad on which to place the first course of concrete segmental retaining wall units. A leveling pad consisting of 6 in. (minimum) thick lean, unreinforced concrete may be used at the wall contractor's option, or if so detailed on the plans. The leveling pad should extend a minimum of 6 in. from the toe and from the heel of the SRW unit.

3.05 SRW and Geosynthetic Reinforcement Placement

A. All materials shall be installed at the proper elevation and orientation as shown in the wall details on the construction plans or as directed by the Owner's Engineer. The concrete segmental wall units and geosynthetic reinforcement shall be installed in general accordance with the manufacturer's recommendations. The drawings shall govern in any conflict between the two requirements.

B. Overlap or splice connections of the geosynthetic in the design strength direction shall not be permitted. The design strength direction is that length of geosynthetic reinforcement perpendicular to the wall face and shall consist of one continuous piece of material. Adjacent sections of geosynthetic shall be placed in a manner to assure that the horizontal coverage shown on the plans is provided.

C. Geosynthetic reinforcement should be installed under tension. A nominal tension shall be applied to the reinforcement and maintained by staples, stakes, or hand tensioning until the reinforcement has been covered by at least 6 inches of soil fill.

D. Broken, chipped, stained or otherwise damaged units shall not be placed in the wall unless they are repaired, and the repair method and results are approved by the SRW Design Engineer.

3.06 Backfill Placement

A. The reinforced backfill shall be placed as shown in construction plans in maximum compacted lift thickness of 8 in. and shall be compacted to a minimum 95% of standard Proctor density (ASTM D 698 [Ref. 75]) at a moisture content within -1% to +3% of optimum. Backfill shall be placed, spread and compacted in such a manner that minimizes the development of wrinkles or movement of the geosynthetic reinforcement and the wall facing units.

B. Only hand-operated compaction equipment shall be allowed within 3 ft of the front of the wall face. A maximum compacted lift thickness of 8 in. shall be used in this zone. Soil density in this area shall not be less than 95% standard Proctor density without affecting wall alignment. Soil density testing in this area should be verified by field density testing.

C. Construction equipment shall not be operated directly on the geosynthetic reinforcement. A minimum backfill thickness of 6 in. is required prior to operation of tracked vehicles over the geosynthetic reinforcement. Turning of tracked vehicles should be kept to a minimum to prevent displacing the fill and damaging or moving the geosynthetic reinforcement.

D. At the end of each day's operation, the wall contractor shall slope the last level of backfill away from the wall facing to direct runoff of rainwater away from the wall face. The general contractor is responsible for ensuring surface runoff from adjacent areas is not allowed to enter the wall construction area.

3.07 Gravel Fill and Drainage Placement

A. Gravel fill shall be placed to the minimum finished thickness and widths shown on the construction plans.

B. Drainage collection pipes shall be installed to maintain gravity flow of water outside of the reinforced soil zone. The drainage collection pipe should daylight into a storm sewer manhole or along a slope at an elevation lower than the lowest point of the pipe within the aggregate drain.

C. The main collection drain pipe, just behind the block facing, shall be a minimum of 3 in. in diameter. The secondary collection drain pipes should be sloped a minimum of two percent to provide gravity flow into the main collection drain pipe. Drainage laterals shall be spaced at a maximum 50 ft spacing along the wall face.

3.08 Cap Block Placement

A. The cap block and/or top SRW unit shall be bonded to the SRW units below using cap adhesive described in Part 2.01F. The block shall be dry and swept clean prior to adhesive placement.

PART 4: MEASUREMENT AND PAYMENT

4.01 Measurement

A. The unit of measurement for furnishing the segmental retaining wall system shall be the vertical square foot of wall surface from the top of the leveling pad to the top of the wall, including coping. The quantity to be paid shall include supply and installation of the segmental retaining wall system. Excavation of unsuitable materials and replacement with select fill, as directed and approved in writing by the Owner or Owner's Engineer shall be paid for under separate pay items.

4.02 Payment

A. The accepted quantities of segmental retaining wall system will be paid for per vertical square foot in place as measured from the top of the leveling pad to the top of wall (including coping) block. The quantities of the segmental retaining wall system as shown on plans or as approved by the Owner or Owner's Engineer shall be used to determine the area supplied. Payment will be made under:

Pay Item	Pay Unit
Geosynthetic Reinforced SRW	SQ. FT.

Appendices

Appendix A: Conventional Single Depth SRW 205
Appendix B: Reinforced Soil SRW 215
Appendix C: Determination of Long-Term Design Strength, LTDS of Geosynthetic Soil Reinforcement 261

APPENDIX A
CONVENTIONAL SINGLE DEPTH SRW

GRAVITY WALL SAMPLE PROBLEM
STATIC Analysis

INPUT INFORMATION

WALL GEOMETRY

exposed wall height: $H_e := 2.5 \cdot ft$

wall embedment: $H_{emb} := .5 \cdot ft$

total wall height: $H' := H_e + H_{emb}$ $\quad H' = 3 \cdot ft$

number of block courses: $N := ceil\left(\frac{H'}{H_u}\right)$ $\quad N = 5$

Final total wall height: $H := N \cdot H_u$ $\quad H = 3.34 \cdot ft$

SURCHARGE PARAMETERS

Live load surcharge: $q_l := 0 \frac{lb}{ft^2}$

Dead load surcharge: $q_d := 0 \frac{lb}{ft^2}$

Make sure that the surcharge loading is always initiated either directly behind the wall.

MODULAR BLOCK PARAMETERS

block height: $H_u := 0.667 \cdot ft$

block depth: $W_u := 1.0 \cdot ft$

cap height: $H_{cu} := 0.3125 \cdot ft$

unit weight of concrete: $\gamma_u := 120 \frac{lb}{ft^3}$

setback of unit: $sb_u := 1in$

retaining wall incliation : $\omega := atan\left(\frac{sb_u}{H_u}\right)$

$\omega = 7.121 \cdot deg$

BACKSLOPE PARAMETERS

backslope angle: $\beta := 0 \cdot deg$

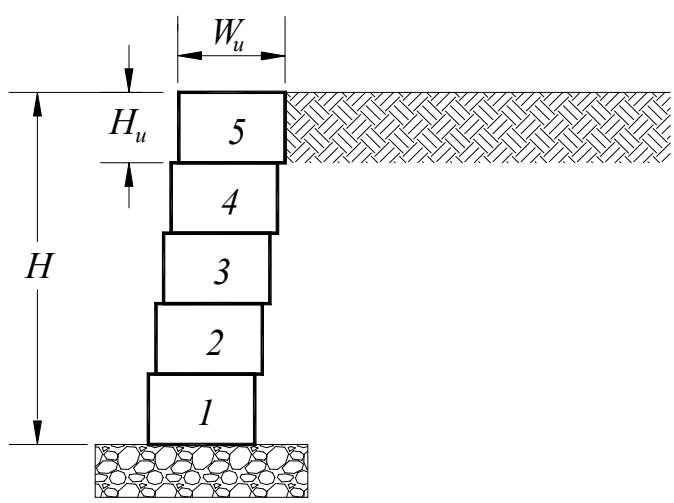

Definitions:

Determine the wall geometry variables needed for External Stability calculations

Input horizontal distance from back of wall face units to crest of slope (β_{offset}):

Note: If considering an infinite slope, enter a large value for βoffset

$\beta_{offset} := 200.0 \cdot ft$

SOIL PARAMETERS

RETAINED SOIL		FOUNDATION SOIL		LEVELING PAD SOIL	
friction angle:	$\phi_r := 34 \cdot deg$	friction angle:	$\phi_f := 30 \cdot deg$	friction angle:	$\phi_d := 40 \cdot deg$
unit weight:	$\gamma_r := 115 \cdot \frac{lb}{ft^3}$	unit weight:	$\gamma_f := 115 \cdot \frac{lb}{ft^3}$	unit weight:	$\gamma_d := 125 \frac{lb}{ft^3}$
		cohesion of foundation soil:	$c_f := 0 \cdot \frac{lb}{ft^2}$	coefficient of interaction between block and leveling pad:	$\mu_b := 0.7$

In this example, the vertical components of loads are <u>not</u> applied

SRW UNIT INTERFACE SHEAR DATA

apparent minimum ultimate shear capacity between segmental units: $a_u := 1100 \cdot \frac{lb}{ft}$

apparent angle of friction between segmental units for peak shear capacity: $\lambda_u := 35 \cdot deg$

(NCMA EQ 6-2) $$\delta_c = \frac{2\phi_{rc}}{3}$$ $\delta_c = 22.68 \cdot deg$

(NCMA EQ 7-7) $$h_s = \beta_{offset} \tan\beta$$ $h_s = 0 \cdot ft$

(NCMA EQ 6-4) $$h_{\max con} = 2H \tan\beta$$ $h_{maxcon} = 0 \cdot ft$

(NCMA EQ 6-5A) $$\beta_{con} = \arctan\left(\frac{h_s}{2H}\right) \quad \text{if} \quad h_s \le h_{\max con}$$

(NCMA EQ 6-5B) $$\beta_{con} = \beta \quad \text{if} \quad h_s > h_{\max con}$$ $\beta_{con} = 0 \cdot deg$

(NCMA EQ 6-1) $$K_{acon} = \frac{\cos^2(\phi_r + \omega)}{\cos^2\omega\cos(\omega - \delta_c)\left[1 + \sqrt{\frac{\sin(\phi_r + \delta_c)\sin(\phi_r - \beta_{con})}{\cos(\omega - \delta_c)\cos(\omega + \beta_{con})}}\right]^2}$$ $K_{acon} = 0.2072$

Determine the horziontal and vertical componentns of active earth pressure coefficient :

$$K_{aHcon} = K_{acon}\cos(\delta_c - \omega)$$ $K_{aHcon} = 0.2$

$$K_{aVcon} = K_{acon}\sin(\delta_c - \omega)$$ $K_{aVcon} = 0.056$

Determine External Horizontal Active Earth Force(Pa):

Resultant horizontal and vertical forces due to active earth pressure from soil self-weight:

(NCMA EQ 6-9) $$P_{sHcon} = 0.5K_{aHcon}\gamma_r(H)^2$$ $P_{sHcon} = 127.7 \cdot \frac{lb}{ft}$

(NCMA EQ 6-14) $$P_{sVcon} = 0.5K_{aVcon}\gamma_r(H)^2$$ $P_{sVcon} = 35.5 \cdot \frac{lb}{ft}$

Resultant horizontal and vertical forces due to active earth pressure from uniform surcharge (P_{qd} & P_{ql}):

(NCMA EQ 6-11) $$P_{qdHcon} = (q_d)K_{aHcon}(H)$$ $$P_{qdHcon} = 0 \cdot \frac{lb}{ft}$$

(NCMA EQ 6-12) $$P_{qlHcon} = (q_l)K_{aHcon}(H)$$ $$P_{qlHcon} = 0 \cdot \frac{lb}{ft}$$

(NCMA EQ 6-15) $$P_{qdVcon} = (q_d)K_{aVcon}(H)$$ $$P_{qdVcon} = 0 \cdot \frac{lb}{ft}$$

(NCMA EQ 6-16) $$P_{qlVcon} = (q_l)K_{aVcon}(H)$$ $$P_{qlVcon} = 0 \cdot \frac{lb}{ft}$$

External horizontal & vertical active earth forces (P_{aH} & P_{aV}):

(NCMA EQ 6-13) $$P_{acong} = P_{sHcon} + P_{qdHcon} + P_{qlHcon}$$ $$P_{aHcon} = 127.7 \cdot \frac{lb}{ft}$$

(NCMA EQ 6-17) $$P_{aVcon} = P_{sVcon} + P_{qdVcon} + P_{qlVcon}$$ $$P_{aVcon} = 35.5 \cdot \frac{lb}{ft}$$

ANALYZE BASE SLIDING

Weight of concrete column (W_W):

(NCMA EQ 6-20) $$W_W = H\,\gamma_u\,W_u$$ $$W_W = 400 \cdot \frac{lb}{ft}$$

Sliding resistance at base of gravity SRW (R_{sc})

(NCMA EQ 6-21) $$R_{sc} = \mu_b[W_W + [P_{sVcon} + P_{qdVcon}]]\tan\phi_d$$ $$R_{sc} = 235.1 \cdot \frac{lb}{ft}$$

Factor of safety for sliding ($FSsld_g$):

(NCMA EQ 6-22) $$FSsl_{con} = \frac{R_{sc}}{P_{aHcon}}$$ $$FSsl_{con} = 1.841$$

ANALYZE OVERTURNING

Calculate the resisting moment (Mr):

Moment arm for the weight of the reinforced infill zone (Xri):

(NCMA EQ 6-24)
$$Xw_{con} = \frac{W_u}{2} + [0.5H\tan(\omega)] - 0.5\Delta_U$$
$Xw_{con} = 0.67 \cdot ft$

Resisting moment due to vertical components:

(NCMA EQ 6-23)
$$Mr_{con} = (W_W Xw_{con}) + P_{sVcon}(W_u + \frac{H}{3}\tan\omega) + P_{qdVcon}(W_u + \frac{H}{2}\tan\omega)$$
$Mr_{con} = 267 \cdot lb$

Driving moment arm (Mo):

(NCMA EQ 6-25)
$$Mo_{con} = P_{sHcon}\frac{H}{3} + (P_{qdHcon} + P_{qlHcon})\frac{H}{2}$$
$Mo_{con} = 142 \cdot lb$

Factor of safety for overturnig (FSot):

(NCMA EQ 6-26)
$$FSot_{con} = \frac{Mr_{con}}{Mo_{con}}$$
$FS_{otcon} = 1.88$

ANALYZE BEARING PRESSURE

Eccentricity of resultant vertical bearing force (e):

(NCMA EQ 6-29)
$$e_{con} = \frac{Mo_{con} - W_W(e_c)}{W_W}$$
$e_{con} = 0.188 \cdot ft$

$$e_c = Xw_{con} - 0.5W_u$$

(NCMA EQ 6-28)
$$B_c = (W_u + h_{lp}) - 2e_c$$

(NCMA EQ 6-27)
$$Q_{ac} = \frac{W_W + (P_{qdVcon} + P_{qlVcon}) + P_{sVcon}}{B_c}$$
$Qa_c = 356 \cdot \frac{lb}{ft^2}$

Ultimate bearing capacity of foundation soils (Qult):

$$Q_{ultcon} = 0.5 N_\gamma \gamma_f B'_g + \gamma_f H_{emb} N_q + c_f N_c$$

$$Q_{ultcon} = 2506 \cdot \frac{lb}{ft^2}$$

Applied bearing stress (Qa):

Determine the Factor of Safety Bearing Capacity (FSbc):

$$FSbc_{con} = \frac{Q_{ultcon}}{Q_{ac}}$$

$$FS_{bcg} = 7$$

ANALYZE INTER-UNIT SLIDING

$$P_{sVcon_k} = 0.5 K_{aVcon} \gamma_r (H - Elev_k)^2$$

$$P_{qdVcon_k} = (q_d) K_{aVcon} (H - Elev_k)$$

(NCMA EQ 6-31) $$W_{W_k} = \gamma_u W_u (H - Elev_k)$$

Calculate the shear capacity at E_1 (Vu_k):

(NCMA EQ 6-30) $$V_{u_k} = a_u + W_{W_k} \tan \lambda_u$$

In this example, the Shear Capacity is defined as follows:

$$V_{u_k} = 1100\ lb/ft + W_{W(n)} \tan 35 \deg$$

$V_{u_k} =$

1156	$\cdot \frac{lb}{ft}$
1212	
1268	
1324	
1380	

$$P_{sHcon_k} = 0.5 K_{aHcon} \gamma_r (H)^2$$

$$P_{qdHcon_k} = (q_d) K_{aHcon} (H)$$

$$P_{qlHcon_k} = (q_l) K_{aHcon} (H)$$

$Ps_{Hg_k} =$

5.1	$\cdot \frac{lb}{ft}$
20.4	
46	
81.7	
127.7	

$Pqd_{Hg_k} =$

0	$\cdot \frac{lb}{ft}$
0	
0	
0	
0	

$Pql_{Hg_k} =$

0	$\cdot \frac{lb}{ft}$
0	
0	
0	
0	

$FSintsldg_k =$

226.4
59.3
27.6
16.2
10.8

(NCMA EQ 6-32) $$FS\,\text{int}\,sldg_k = \frac{V_{u_k}}{P_{sHg_k} + P_{qdHg_k} + P_{qlHg_k}}$$

SEISMIC Analysis

In this example, the displacement analysis is not considered

maximum earthquake acceleration factor: $A := 0.2$

(NCMA EQ 9-23) $k_{hext} = \frac{A}{2}$ $k_{h.ext} = 0.1$

seismic inertia angle:

(NCMA EQ 9-26) $\theta_{ext} = a\tan(k_{hext})$ $\Theta_{ext} = 5.711 \cdot deg$

Determine total seismic erath pressure coefficient and dyn component, horizontal and vertical components

dynamic earth pressure coefficient:

(NCMA EQ 9-25)

$$K_{aEcon} = \frac{\cos^2(\phi_r + \omega - \theta_{ext})}{\cos\theta_{ext}\cos^2\omega\cos(\delta_c - \omega + \theta_{ext})\left[1 + \sqrt{\frac{\sin(\phi_r + \delta_g)\sin(\phi_r - \beta_{con} - \theta_{ext})}{\cos(\delta_c - \omega + \theta_{ext})\cos(\omega + \beta_{con})}}\right]^2}$$

$K_{aEcon} = 0.266$

$\Delta K_{dyncon} = 0.059$

(NCMA EQ 9-28) $\Delta K_{dynH} = (K_{aEcon} - K_{acon})\cos(\delta_c - \omega) = \Delta K_{dyn}\cos(\delta_c - \omega)$ $\Delta K_{dynHcon} = 0.056$

(NCMA EQ 9-33) $\Delta K_{dynV} = (K_{aEcon} - K_{acon})\sin(\delta_c - \omega) = \Delta K_{dyn}\sin(\delta_c - \omega)$ $\Delta K_{dynVcon} = 0.016$

Determine total seismic earth pressures due to soil, horizontal and vertical components

(NCMA EQ 9-29) $P_{aEH} = 0.5K_{aEHcon}\gamma_r H^2$ $P_{aEH} = 164 \cdot \frac{lb}{ft}$

(NCMA EQ 9-34) $P_{aEV} = 0.5K_{aEVcon}\gamma_r H^2$ $P_{aEV} = 46 \cdot \frac{lb}{ft}$

Determine dynamic component of earth pressure, horizontal and vertical components

(NCMA EQ 9-30) $\Delta P_{dynH} = 0.5\Delta K_{dynH}\gamma_r H^2 = P_{aEH} - P_{sH}$ $\Delta P_{dynHcon} = 36 \cdot \frac{lb}{ft}$

(NCMA EQ 9-35) $\Delta P_{dynV} = 0.5\Delta K_{dynV}\gamma_r H^2 = P_{aEV} - P_{sV}$ $\Delta P_{dynVcon} = 10 \cdot \frac{lb}{ft}$

Determine total seismic earth pressures due to soil and surcharges, horiz and vert components

(NCMA EQ 9-31) $P_{aEHcon} = P_{sH} + P_{qdH} + 0.5\Delta P_{dynH}$ $P_{aEHcon} = 146 \cdot \frac{lb}{ft}$

$P_{aEVcon} = P_{sV} + P_{qdV} + 0.5\Delta P_{dynV}$ $P_{aEVcon} = 41 \cdot \frac{lb}{ft}$

ANALYZE SEISMIC BASE SLIDING

determine sliding to resistance at unit/pad interface, including vert comp of dyn load

(NCMA EQ 9-36) $R_{sc(dyn)} = R_{sc} + \mu_b 0.5\Delta P_{dynV} \tan\phi = \mu_b \left(W_W + P_{sV} + P_{qdV} + 0.5\,\Delta P_{dynV}\right) \tan\phi$

determine inertial force fo wall face $R_{sc_seismic} = 235.065 \cdot \frac{lb}{ft}$

$P_{IRcon} := k_{h.ext} \cdot W_W$ $P_{IRcon} = 40 \cdot \frac{lb}{ft}$

$P_{aEHcon} = 145.716 \cdot \frac{lb}{ft}$

FS against seismic sliding

(NCMA EQ 9-37) $FS_{sl(seismic)} = \dfrac{R_{sc(dyn)}}{P_{sH} + P_{qdH} + 0.5\Delta P_{dynV} + k_{h(ext)} W_w}$ $FSsl_{seismic.g} = 1.27$

ANALYZE SEISMIC OVERTURNING

resistance to overturning moment

conservatively treat resisitng moment arm of vertical components as acting at 1/3H for both soil and surchrage

(NCMA EQ 9-38)

$$M_{r(seismic)} = M_r + 0.5\Delta P_{dynV}\left(W_u + \left(\frac{H}{2}\right)\tan(\omega)\right)$$

$$= W_w X_w + P_{sV}\left(W_u + \left(\frac{H}{3}\right)\tan(\omega)\right) + [(P_{qdV} + 0.5\Delta P_{dynV})\left(W_u + \left(\frac{H}{2}\right)\tan(\omega)\right)]$$

$Mr_{dyn.gg} = 267 \cdot lb$

driving, overturning moment

(NCMA EQ 9-39)

$$M_{O(seismic)} = k_{hext} W_w \left(\frac{H}{2}\right) + P_{sH}\left(\frac{H}{3}\right) + P_{qdH}\left(\frac{H}{2}\right) + 0.5\Delta P_{dynH}\left(\frac{H}{2}\right)$$ $Mdo_{dyn.g} = 238.752 \cdot lb$

FS Seismic Overturning

(NCMA EQ 9-40) $FS_{ot(seismic)} = \dfrac{M_{r(seismic)}}{M_{O(seismic)}}$ $FSot_{seismic.g} = 1.12$

ANALYZE SEISMIC BEARING PRESSURE

(NCMA EQ 9-43)

$$e_{seismic} = \frac{\left[k_h W_w\left(\frac{H}{2}\right) + P_{sH}\left(\frac{H}{3}\right) + P_{qdH}\left(\frac{H}{2}\right) + 0.5\Delta P_{dynH}\left(\frac{H}{2}\right)\right] - W_w e_w}{W_w}$$

$e_{gseismic} = 0.43 \cdot ft$

(NCMA EQ 9-42)

$$B'_c = W_u + h_{lp} - 2e_{seismic}$$

$B'_{gseismic} = 0.64 \cdot ft$

Bearing Capacity

(NCMA EQ 12-12)

$$Q_{ult.gseismic} := 0.5 \cdot N_\gamma \cdot \gamma_f \cdot B'_{gseismic} + \gamma_f \cdot H_{emb} \cdot N_q + c_f \cdot N_c$$

$Q_{ult.gseismic} = 1883 \cdot \frac{lb}{ft^2}$

Bearing Pressure

(NCMA EQ 9-41)

$$Q_{ac(seismic)} = \frac{[W_W + P_{s(V)} + P_{q(V)} + 0.5\Delta P_{dynV}]}{B'_c}$$

$Qa_{gseismic} = 625 \cdot \frac{lb}{ft^2}$

FS Bearing Capacity

(NCMA EQ 12-13)

$$FSbc_{gseismic} := \frac{Q_{ult.gseismic}}{Qa_{gseismic}}$$

$FSbc_{gseismic} = 3.01$

ANALYZE SEISMIC INTER BLOCK SLIDING

(NCMA EQ 9-46)

$$V_{u_z} = a_u + W_{w_z} \tan \lambda_u$$

(NCMA EQ 9-45)

$$P_{aEHext_z} = P_{sH_z} + 0.5\Delta P_{dynH_z}$$

(NCMA EQ 9-44)

$$FS_{sc(seismic)_z} = \frac{V_{u_z}}{P_{aEHext_z} + k_h W_{w_z}}$$

$k =$	$V_{u_k} =$	$P_{aEseismicH_k} + k_{h.ext} \cdot W_{wu_k} =$	$FSintsldgseismic_k =$
5	1156	14	84
4	1212	39	31
3	1268	76	17
2	1324	125	11
1	1380	186	7

$\cdot \frac{lb}{ft}$ $\cdot \frac{lb}{ft}$

APPENDIX B
REINFORCED SOIL SRW

SAMPLE PROBLEM (STATIC)

INPUT INFORMATION

WALL GEOMETRY

exposed wall height: $H' = 13 \cdot ft$

wall embedment: $H_{emb} = 1.33 \cdot ft$

total wall height: $H_t = H' + H_{emb}$ $\quad H_t = 14.33 \cdot ft$

number of block courses: $N = ceil\left(\frac{H_t}{H_u}\right)$ $\quad N = 22$

Final total wall height: $H = N \cdot H_u$ $\quad H = 14.67 \cdot ft$

reinforcement length: (minimum length of reinforcement is 0.6H or 4 feet) $L = 10.5 \cdot ft$

MODULAR BLOCK PARAMETERS

block height: $H_u = 0.6667 \cdot ft$

block depth: $W_u = 1.0 \cdot ft$

cap height: $H_{cu} = 0.3125 \cdot ft$

unit weight of concrete: $\gamma_u = 115 \frac{lb}{ft^3}$

setback of unit: $sb_u = 1 in$

retaining wall inclination : $\omega = atan\left(\frac{sb_u}{H_u}\right)$

$\omega = 7.125 \cdot deg$

SURCHARGE PARAMETERS

Live load surcharge: $q_l = 150 \frac{lb}{ft^2}$

Dead load surcharge: $q_d = 100 \frac{lb}{ft^2}$

BACKSLOPE PARAMETERS

backslope angle: $\beta = 25 \cdot deg$

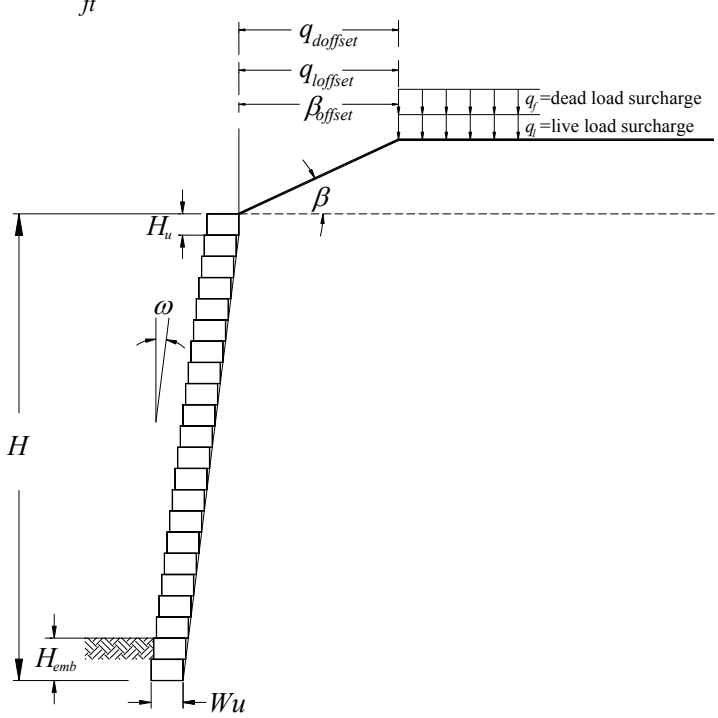

Definitions:

Determine the wall geometry variables needed for External Stability calculations, including:

- offsets of slope crests
- offsets for surcharges, both live and dead
- calculating heights and widths of reinforced mass
- calculating equivalent slopes behind reinforced mass
- calculating dead load influence zone

Input horizontal distance from back of wall face units to crest of slope (β_{offset}):

$\beta_{offset} = 5.0 \cdot ft$

Input horizontal distances from back of wall units to an offset surcharge for dead and live loads $(q_{doffset})$ and $(q_{loffset})$:

$q_{doffset} = 5ft$

$q_{loffset} = 5ft$

Make sure that the surcharge loading is always initiated either a) directly behind the wall (flat or sloped) or b) on a flat part of the backslope.

SOIL PARAMETERS

INFILL SOIL		RETAINED SOIL		FOUNDATION SOIL		LEVELING PAD SOIL	
friction angle:	$\phi_i = 30 \cdot deg$	friction angle:	$\phi_r = 30 \cdot deg$	friction angle:	$\phi_f = 30 \cdot deg$	friction angle:	$\phi_d = 40 \cdot deg$
unit weight:	$\gamma_i = 120 \cdot \frac{lb}{ft^3}$	unit weight:	$\gamma_r = 120 \cdot \frac{lb}{ft^3}$	unit weight:	$\gamma_f = 120 \cdot \frac{lb}{ft^3}$	unit weight:	$\gamma_d = 125 \frac{lb}{ft^3}$
				cohesion of foundation soil:	$c_f = 0 \cdot \frac{lb}{ft^2}$		

In this example, the vertical components of loads are applied

EXTERNAL STABILITY

- Base Sliding
- Overturning
- Bearing Capacity

Determine the width of reinforced zone and increase in height above top of wall due to the backslope:

Width of reinforced zone at top of wall (L'):

(NCMA EQ 7-3) $$L' = L - W_u$$ $L' = 9.5 \cdot ft$

Increase in width due to backslope (L''):

(NCMA EQ 7-4) $$L'' = \frac{L' \tan(\beta) \tan(\omega)}{1 - \tan(\beta) \tan(\omega)}$$ $L'' = 0.6 \cdot ft$

Horizontal width of reinforced sone at intersection with backslope (L_β):

(NCMA EQ 7-11A) $$L_\beta = L' - L''$$ $L_\beta = 10.1 \cdot ft$

Increase in height (at distance L') due to backslope (h):

(NCMA EQ 7-5) $$h = L_\beta \tan \beta$$ $h = 4.7 \cdot ft$

Increase in height due to backslope (h_s):

(NCMA EQ 7-7) $$h_s = \beta_{offset} \tan \beta$$ $h_s = 2.33 \cdot ft$

Theoretical maximum height of slope (h_{max}) -
(increased height (above top of wall) due a continuous slope β extending to the horizontal distance ($L_\beta + H + h$)) :

(NCMA EQ 7-6) $$h_{\max} = \tan \beta [L_\beta + (H + h)]$$ $h_{max} = 13.74 \cdot ft$

Reduce L_β (for subsequent equations), if slope crests within reinforced zone, thus reducing L'' to L''_s :

$$L''_s = \min(L'' or\ h_s \tan \omega)$$ $L''_s = 0.29 \cdot ft$

(NCMA EQ 7-11A,B,C) $$L_\beta = \min(L' + L'' or\ L' + L''_s)$$ $L_\beta = 9.79 \cdot ft$

Determine the height to from base of wall to top grade, at the back of the reinforced zone(H_{ext}):

$H_h = H + h$ is the height of soil at a distance of L_β behind the wall

$H_s = H + h_s$ is the height of soil at the crest of a broken slope

(NCMA EQ 7-10A,B,C) $H_{ext} = \min(H_h \; or \; H_s)$ is the height of soil to calculate the active earth pressure from soil self-weight.

Determine the equivalent β (external): the equivalent slope behind reinforced mass used for external analysis:

Note: Three possible cases exist
1. where h_s is less than or equal to h, (in which case β_{ext} is considered to be 0 deg)
2. where h_s is located between h and h_{max}, and
3. where h_s is greater than h_{max}, (in which case β_{ext} is equal to β)

(NCMA EQ 7-9A) $\beta_{ext} = 0$ if $h_s \le h$

(NCMA EQ 7-9C) $\beta_{ext} = \beta$ if $h_s > h_{\max}$

(NCMA EQ 7-9B) $\beta_{ext} = \arctan\left[\dfrac{h_s - h}{(H+h)}\right]$ if $h < h_s \le h_{\max}$

$\beta_{ext} = 0 \cdot deg$

Check to see if dead load is offset enough for removal of all resisting forces of surchage, regardless of geogrid length:

(Internal variables needed to calculate,include δ_i, h_{maxint}, β_{int} α_i shown in the internal stability section

(NCMA EQ 7-44) $\delta_i = \dfrac{2\phi_i}{3}$ $\delta_i = 20.01 \cdot deg$

(NCMA EQ 7-45) $h_{\max\text{int}} = 2H \tan\beta$ $h_{maxint} = 13.68 \cdot ft$

(NCMA EQ 7-46A) $\beta_{\text{int}} = \arctan\left(\dfrac{h_s}{2H}\right)$

(NCMA EQ 7-46B) $\beta_{\text{int}} = \beta$

$\beta_{int} = 4.5 \cdot deg$

(NCMA EQ 7-50)

$$\alpha_i = a\tan\left[\frac{-\tan(\phi_i - \beta_{\text{int}}) + \sqrt{[\tan(\phi_i - \beta_{\text{int}}) \times (\tan(\phi_i - \beta_{\text{int}}) + \cot(\phi_i + \omega)) \times (1 + \tan(\delta_i - \omega) \times \cot(\phi_i + \omega))]}}{1 + \tan(\delta_i - \omega) \times (\tan(\phi_i - \beta_{\text{int}}) + \cot(\phi_i + \omega))}\right] + \phi_i$$

$\alpha_i = 52.32 \cdot deg$

Determine height above top of wall of the intersection of failure plane with a continuous top slope of angle β (h_{int})

(NCMA EQ 7-26) $$h_{\text{int}} = \frac{\left(H(1-\tan\omega\tan\alpha_i)\right)}{\tan\alpha_i - \tan\beta}\tan\beta$$ $h_{int} = 6.9 \cdot ft$

Determine horizontal distance, (d_{int}) from back of wall face to the intersection of failure plane and top grade

(NCMA EQ 7-27A) $$d_{\text{int}} = \frac{(H+h_s)}{\tan\alpha_i} - H\tan\omega$$ if $h_s < h_{\text{int}}$

(NCMA EQ 7-27B) $$d_{\text{int}} = \frac{(H+h_{\text{int}})}{\tan\alpha_i} - H\tan\omega$$ if $h_s \geq h_{\text{int}}$

$d_{int} = 11.3 \cdot ft$

Check for two situations, either of which automatically zero out all dead load resisting forces (producing same results as a live load):

First, if dead load offset is beyond internal failure plane or Second, if it is beyond base geogrid length, then no dead resisting forces

If dead load is both in front of int plane and also over grid zone (CASE A), leave q_d resisting forces on (reduce with $L_{\beta q}$ as shown below)

(NCMA EQ 7-28A) if $q_{doffset} > d_{\text{int}}$ or $q_{doffset} > L_\beta$ then q_d is neglected as a resisting force

(NCMA EQ 7-28B) if $q_{doffset} \leq d_{\text{int}}$ and $q_{doffset} \leq L_\beta$ then q_d is applied as a resisting force

<u>Determine reduction of resisting forces due to offset dead load that rests over a portion of geogrid lengths.</u>

Reduce the length of L_β to a reduced dead surcharge length $L_{\beta qdr}$ over which the offset dead load directly rests. $L_{\beta qdr}$ replaces of L_β in resisting force equations for <u>external sliding, external overturning, and internal sliding in static and seismic</u>

(NCMA EQ 7-29) $$L_{\beta q} = L_\beta - H_{ext}\,tan(\omega) - q_{doffset}$$ $L_{\beta q} = 2.67 \cdot ft$

EXTERNAL EARTH PRESSURES AND FAILURE PLANE

Determine the external acitve earth pressure coefficient (Ka_{ext}):

Wall to soil friction angle for external stability analysis (δ_e):

(NCMA EQ 7-2) $\delta_e = lesser\ of\ \phi_i\ or\ \phi_r$ $\delta_e = 30 \cdot deg$

Determine the external failure plane:

$$\alpha_e = a\tan\left[\frac{-\tan(\phi_r - \beta_{ext}) + \sqrt{[\tan(\phi_r - \beta_{ext}) \times (\tan(\phi_r - \beta_{ext}) + \cot(\phi_r + \omega)) \times (1 + \tan(\delta_e - \omega) \times \cot(\phi_r + \omega))]}}{1 + \tan(\delta_e - \omega) \times (\tan(\phi_r - \beta_{ext}) + \cot(\phi_r + \omega))}\right] + \phi_r$$

$\alpha_e = 52.04 \cdot deg$

Determine the external active earth pressue coefficient (Ka_{ext}):

(NCMA EQ 7-1)
$$K_{aext} = \frac{\cos^2(\phi_r + \omega)}{\cos^2\omega\cos(\omega - \delta_e)\left[1 + \sqrt{\frac{\sin(\phi_r + \delta_e)\sin(\phi_r - \beta_{ext})}{\cos(\omega - \delta_e)\cos(\omega + \beta_{ext})}}\right]^2}$$
$K_{aext} = 0.25$

Determine the horziontal and vertical componentns of active earth pressure coefficient :

$$K_{aHext} = K_{aext}\cos(\delta_e - \omega)$$ $K_{aHext} = 0.227$

$$K_{aVext} = K_{aext}\sin(\delta_e - \omega)$$ $K_{aVext} = 0.096$

Determine External Horizontal Active Earth Force(P_a):

Resultant horizontal force due to active earth pressure from soil self-weight (P_s):

(NCMA EQ 7-12) $P_s = 0.5K_{aext}\gamma_r(H_{ext})^2$ $P_s = 4263 \cdot \frac{lb}{ft}$

Resultant horizontal and vertical forces due to active earth pressure from soil self-weight:

(NCMA EQ 7-14) $P_{sH} = 0.5K_{aext}\gamma_i(H_{ext})^2\cos(\delta_e - \omega)$ $P_{sH} = 3927.8 \cdot \frac{lb}{ft}$

(NCMA EQ 7-20) $P_{sV} = 0.5K_{aext}\gamma_i(H_{ext})^2\sin(\delta_e - \omega)$ $P_{sV} = 1657.2 \cdot \frac{lb}{ft}$

Resultant horizontal force due to active earth pressure from uniform surcharge (P_q):

(NCMA EQ 7-13) $$P_q = (q_l + q_d)K_{aext}(H_{ext})$$ $$P_q = 1045 \cdot \frac{lb}{ft}$$

Resultant horizontal and vertical forces due to active earth pressure from uniform surcharge (P_{qd} & P_{ql}):

(NCMA EQ 7-15) $$P_{qdH} = (q_d)K_{aext}(H_{ext})\cos(\delta_e - \omega)$$ $$P_{qdH} = 385.1 \cdot \frac{lb}{ft}$$

(NCMA EQ 7-16) $$P_{qlH} = (q_l)K_{aext}(H_{ext})\cos(\delta_e - \omega)$$ $$P_{qlH} = 577.65 \cdot \frac{lb}{ft}$$

(NCMA EQ 7-21) $$P_{qdV} = (q_d)K_{aext}(H_{ext})\sin(\delta_e - \omega)$$ $$P_{qdV} = 162.48 \cdot \frac{lb}{ft}$$

(NCMA EQ 7-22) $$P_{qlV} = (q_l)K_{aext}(H_{ext})\sin(\delta_e - \omega)$$ $$P_{qlV} = 243.71 \cdot \frac{lb}{ft}$$

External horizontal active earth force (P_a):

$$P_a = P_s + P_{qd} + P_{ql}$$ $$P_a = 5308 \cdot \frac{lb}{ft}$$

External horizontal & vertical active earth forces (P_{aH} & P_{aV}):

(NCMA EQ 7-17) $$P_{aH} = P_{sH} + P_{qdH} + P_{qlH}$$ $$P_{aH} = 4890.5 \cdot \frac{lb}{ft}$$

(NCMA EQ 7-23) $$P_{aV} = P_{sV} + P_{qdV} + P_{qlV}$$ $$P_{aV} = 2063.4 \cdot \frac{lb}{ft}$$

ANALYZE BASE SLIDING

Weight of reinforced infill zone (W_{ri}):

(NCMA EQ 7-30) $$W_{ri} = L\gamma_i H$$ $$W_{ri} = 18480.9 \cdot \frac{lb}{ft}$$

Weight of reinforced slope zone ($W_{r\beta}$):

The following expression defines the weight of soil in the backslope above reinforced zone, $W_{r\beta}$, per 3rd Edition rules: by acutal geometry - either if a slope continous over the reinforced zone or if a broken back slope that crests within the reinforced zone.

(NCMA EQ 7-31A) $$W_{r\beta} = W_{r\beta 1} + W_{r\beta 2} + W_{r\beta 3}$$ (for broken-back slope condition)

(NCMA EQ 7-31B) $$W_{r\beta} = \frac{L'\gamma_i h}{2} = \frac{L'\gamma_i L_\beta \tan\beta}{2}$$ (for continuous slope condition)

$$W_{r\beta} = 1999.3 \cdot \frac{lb}{ft}$$

Determine weight and moment arms for each portion of a broken slope, for when a broken slope crests within reinforced zone.

(NCMA EQ 7-31A1) $$W_{r\beta 1} = \frac{\beta_{offset} \times h_s}{2} \times \gamma_i$$ $W_{r\beta 1} = 699.46 \cdot \frac{lb}{ft}$

(NCMA EQ 7-31A2) $$W_{r\beta 2} = \left[\left(L' - \beta_{offset}\right) \times h_s\right] \times \gamma_i$$ $W_{r\beta 2} = 1259 \cdot \frac{lb}{ft}$

(NCMA EQ 7-31A3) $$W_{r\beta 3} = \frac{h_s^{\,2} \times \tan(\omega)}{2} \times \gamma_i$$ $W_{r\beta 3} = 40.77 \cdot \frac{lb}{ft}$

(NCMA EQ 7-36A1) $$X_{r\beta 1} = H \tan(\omega) + W_u + \tfrac{2}{3}\beta_{offset}$$ $X_{r\beta 1} = 6.17 \cdot ft$

(NCMA EQ 7-36A2) $$X_{r\beta 2} = H \tan(\omega) + W_u + \beta_{offset} + \frac{L' - \beta_{offset}}{2}$$ $X_{r\beta 2} = 10.08 \cdot ft$

(NCMA EQ 7-36A3) $$X_{r\beta 3} = H \tan(\omega) + W_u + L' + \frac{h_s \tan(\omega)}{3}$$ $X_{r\beta 3} = 12.43 \cdot ft$

Sliding resistance at base of soil reinforced SRW (R_s)

If reinforced (infill) soil controls:

(NCMA EQ 7-32A) $$R_S = C_{ds}\left(q_d L_{\beta q} + W_{ri} + W_{r\beta}\right)\tan\phi_i$$

If gravel fill controls:

(NCMA EQ 7-32B) $$R_S = C_{ds}\left(q_d L_{\beta q} + W_{ri} + W_{r\beta}\right)\tan\phi_d$$

If foundation soil controls:

(NCMA EQ 7-32C) $$R_S = C_{ds}\left[c_f L + \left(q_d L_{\beta q} + W_{ri} + W_{r\beta}\right)\tan\phi_f\right]$$

$R_S = 13028.8 \cdot \frac{lb}{ft}$

Factor of safety for sliding (FS_{sl}):

(NCMA EQ 7-33) $$FS_{sl} = \frac{R_s}{P_{aH}}$$ $FSsl = 2.66$

ANALYZE OVERTURNING

Calculate the resisting moment (Mr):

Moment arm for the weight of the reinforced infill zone (X_{ri}):

(NCMA EQ 7-35) $$X_{ri} = \frac{(L + H\tan(\omega))}{2} - 0.5\Delta_U$$ $X_{ri} = 6.13 \cdot ft$

Moment arm for the weight of the reinforced slope zone ($X_{r\beta}$):

(NCMA EQ 7-36B) $$X_{r\beta} = H\tan(\omega) + W_u + \tfrac{2}{3}L'$$ $X_{r\beta} = 9.17 \cdot ft$

Resisting moment due to soil above reinforced zone:

(part of NCMA EQ 7-34A) $$M_{r\beta} = W_{r\beta 1}X_{r\beta 1} + W_{r\beta 2}X_{r\beta 2} + W_{r\beta 1}X_{r\beta 3} \quad \text{if} \quad h_s \le h$$

(part of NCMA EQ 7-34B) $$M_{r\beta} = W_{r\beta}X_{r\beta} \quad \text{if} \quad h_s > h$$ $M_{r\beta} = 17515.3 \cdot lb$

Resisting moment due to soil in the reinforced zone:

(part of NCMA EQ 7-34) $$M_{ri} = W_{ri}X_{ri}$$

$M_{ri} = 113195.7 \cdot lb$

Moment arm due to surcharge ($X_{q\beta}$):

(NCMA EQ 7-37) $$X_{q\beta} = L + [(H_{ext})\tan(\omega)] - \frac{L_{\beta q}}{2}$$ $X_{q\beta} = 11.29 \cdot ft$

Resisting moment due to surcharge (dead) load (over distance determined earlier):

(part of NCMA EQ 7-34) $$M_{q\beta} = q_d L_{\beta q} X_{q\beta}$$ $M_{q\beta} = 3011 \cdot lb$

Resisting moment due to vertical components:

(part of NCMA EQ 7-34) $$M_{rV} = [P_{qdV}X_q] + [P_{sV}X_s]$$ $M_{rV} = 20452 \cdot lb$

where:

(NCMA EQ 7-24) $$X_s = L + (\frac{H_{ext}}{3})\tan\omega$$

(NCMA EQ 7-25) $$X_q = L + (\frac{H_{ext}}{2})\tan\omega$$

Note: The P_{qdV} term only applies if EQ 7-28 applies

Resisting Moment (M_r):

(NCMA EQ 7-34A,B) $$M_r = M_{r\beta} + M_{ri} + M_{q\beta} + M_{rV}$$ $M_r = 154174.5 \cdot lb$

Calculate the driving moment (M_o):

Moment arm for the resultant horizontal force (P_s) due to the active earth pressure fom soil self wieght (Y_s):

(NCMA EQ 7-18) $$Y_s = \frac{H_{ext}}{3}$$ $Y_s = 5.67 \cdot ft$

Moment arm for the resultant horisontal force (P_q) due to active earth pressure from a uniform surcharge (Y_q):

(NCMA EQ 7-19) $$Y_q = \frac{H_{ext}}{2}$$ $Y_q = 8.5 \cdot ft$

Driving moment arm (M_o):

(NCMA EQ 7-38) $$M_O = P_{sH} Y_s + (P_{qdH} + P_{qlH}) Y_q$$ $M_o = 30438.7 \cdot lb$

Determine the Factor of Safety for Overturning (FS_{ot}):

Factor of safety for overturnig (FS_{ot}):

(NCMA EQ 7-39) $$FS_{ot} = \frac{M_r}{M_o}$$ $FS_{ot} = 5.07$

ANALYZE BEARING PRESSURE

Eccentricity of resultant vertical bearing force (e):

(NCMA EQ 7-41) $$e = \frac{L}{2} - \frac{M_r - M_o}{W_{ri} + W_{r\beta} + q_d L_{\beta q}}$$ $e = -0.23 \cdot ft$

Equivalent footing width of eccentrically loaded foundation base of soil reinforced SRW's (B):

(NCMA EQ 7-40) $$B = L - 2e$$ $B = 10.5 \cdot ft$

Bearing capacity coefficients (refer to Table 12-1):

$N_q = 18.4$

$N_c = 30.14$

$N_\gamma = 22.402$

Ultimate bearing capacity of foundation soils (Q_{ult}):

(NCMA EQ 12-12) $$Q_{ult} = 0.5 N_\gamma \gamma_f B + \gamma_f H_{emb} N_q + c_f N_c$$ $Q_{ult} = 17050.4 \cdot \frac{lb}{ft^2}$

Applied bearing stress (Q_a):

(NCMA EQ 7-42) $$Q_a = \frac{[W_{ri} + W_{r\beta} + (q_l + q_d) L_\beta] + P_{aV}}{B}$$ $Q_a = 2380 \cdot \frac{lb}{ft^2}$

Determine the Factor of Safety Bearing Capacity (FS_{bc}):

(NCMA EQ 12-13) $$FS_{bc} = \frac{Q_{ult}}{Q_a}$$ $FS_{bc} = 7.16$

EXTERNAL STABILITY ANALYSIS IS NOW COMPLETE WITH ALL MINIMUM FACTORS OF SAFETY SATISFIED

SUMMARY OF RESULTS

Results of External Stability Analysis (Static): $K_{aext} = 0.246$ $\alpha_e = 52.04 \cdot deg$

Horizontal Compent of Force (due to soil)	$P_{sH} = 3927.8 \cdot \frac{lb}{ft}$	Vertical Component of Force (due to soil):	$P_{sV} = 1657.2 \cdot \frac{lb}{ft}$
Horizontal Compent of Force (due to all earth pressures)	$P_{aH} = 4890.5 \cdot \frac{lb}{ft}$	Vertical Component of Force (due to all earth pressures)	$P_{aV} = 2063 \cdot \frac{lb}{ft}$
		Total Vertical Load	$r = 22566 \cdot \frac{lb}{ft}$
Sliding Resistance:	$R_s = 13028.8 \cdot \frac{lb}{ft}$	FOS Sliding:	$FSsl = 2.66$
Driving Moment:	$M_o = 30438.7 \cdot lb$	FOS Overturning:	$FS_{ot} = 5.07$
Resisting Moment:	$M_r = 154175 \cdot lb$	FOS Bearing Capacity:	$FS_{bc} = 7.16$
Bearing Capacity:	$Q_{ult} = 17050.4 \cdot \frac{lb}{ft^2}$	Base Reinforcement length:	$L = 10.5 \cdot ft$
Maximum Bearing Pressure:	$Q_a = 2380 \cdot \frac{lb}{ft^2}$	Base Eccentricity:	$e = -0.23 \cdot ft$
			$B = 10.5 \cdot ft$

INTERNAL STABILITY

- Tensile Overstress
- Pullout
- Internal Sliding

FORCES AND STRESSES USED IN CALCULATION OF INTERNAL STABILITY FOR GEOSYNTHETIC SOIL REINFORCED SRW

Determine maximum possible height above reinforced of an slope that does not crest with 2* *H* of wall

(NCMA EQ 7-45) $h_{\max\text{int}} = 2H\tan(\beta)$ $h_{maxint} = 13.68 \cdot ft$

Determine equivalent slope used for internal earth pressure calculations

(NCMA EQ 7-46A) $\beta_{\text{int}} = \arctan\dfrac{h_s}{2H}$ if $h_s < h_{\max\text{int}}$

(NCMA EQ 7-46B) $\beta_{\text{int}} = \beta$ if $h_s \geq h_{\max\text{int}}$

$\beta_{int} = 4.54 \cdot deg$

Note:
For internal stability calculations sample calculations will be shown for grid layer #1. All other grid layers will be shown through tabular calculations at the end of this section.

Determine the Internal Soil Pressures

Wall to soil friction angle for internal stability analysis (δ_i):

(NCMA EQ 7-44) $\delta_i = \dfrac{2}{3}\phi_i$ $\delta_i = 20.01 \cdot deg$

Internal active earth pressure coefficient (Ka_{int}):

(NCMA EQ 7-43)

$$K_{a\,\text{int}} = \frac{\cos^2(\phi_i + \omega)}{\cos^2\omega\cos(\omega - \delta_i)\left[1 + \sqrt{\dfrac{\sin(\phi_i + \delta_i)\sin(\phi_i - \beta_{\text{int}})}{\cos(\omega - \delta_i)\cos(\omega + \beta_{\text{int}})}}\right]^2}$$

$Ka_{int} = 0.263$

Determine Long Term Design Strength of reinforement using NCMA method "B" (LTDS):

REDUCTION FACTORS
& COEFFICIENTS

creep reduction factor: $RF_{cr} = 1.58$

durability reduction factor: $RF_d = 1.10$

installation damage reduction factor: $RF_{id} = 1.05$

$T_{ult} = \begin{pmatrix} 3500 \\ 4700 \\ 7400 \end{pmatrix} \cdot \dfrac{lb}{ft}$ for $Grid_{type} = \begin{pmatrix} \text{"TYPE 1"} \\ \text{"TYPE 2"} \\ \text{"TYPE 3"} \end{pmatrix}$

(NCMA EQ 2-3)

$$LTDS = \frac{T_{ult}}{RF_d \cdot RF_{id} \cdot RF_{cr}}$$

$$LTDS = \begin{pmatrix} 1918 \\ 2575 \\ 4055 \end{pmatrix} \cdot \frac{lb}{ft}$$

coefficient of shear stress interaction: $C_i = 0.7$

coefficient of direct sliding: $C_{ds} = 1.0$

*Note: C_{ds} should be assigned a value of 1.0 unless a layer of geosynthetic reinforcement is placed at the base of the first course of the SRW units.

ANALYZE TENSILE REQUIREMENTS FOR GEOGRID LAYERS

DETERMINATION OF THE FORCE ACTING ON EACH GEOGRID LAYER

(NCMA EQ 7-61)

$$F_{g(n)} = [\gamma_i D_n + q_l + q_d] K_a A_{c(n)} \cos(\delta_i - \omega)$$

Note: The first step to analyzing the tensile requirement of the reinforcement elements, is to layout the wall and reinforcement.

IDENTIFY BLOCK LAYERS

SRW Unit #: $unit_k =$	Heel Elev: $Elev_k =$
22	14 $\cdot ft$
21	13.33
20	12.67
19	12
18	11.33
17	10.67
16	10
15	9.33
14	8.67
13	8
12	7.33
11	6.67
10	6
9	5.33
8	4.67
7	4
6	3.33
5	2.67
4	2
3	1.33
2	0.67
1	0

GEOGRID PARAMETERS

number of geogrid layers: $Nl = 8$

SELECT GEOGRID REINFORCEMENT LAYERS

geogrid courseing: $srw_n =$	geogrid elevation: $E_n =$	initial geogrid length (L): $lengthofgrid =$
21	14 $\cdot ft$	10.5 $\cdot ft$
18	12	10.5
15	10	10.5
12	8	10.5
9	6	10.5
6	4	10.5
3	2	10.5
1	0.67	10.5

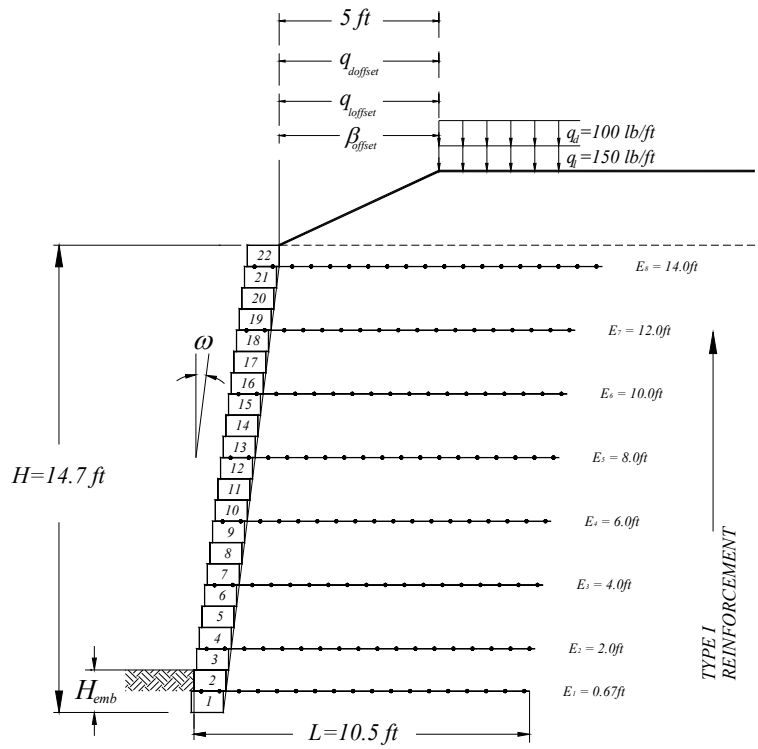

Calculate Contributary area ($A_{c(n)}$):

(NCMA EQ 7-54) $A_{c(1)} = (E_{(2)} + E_{(1)})/2$ (For the lowermost layer) $A_{c_1} = 1.33 \cdot ft$

(NCMA EQ 7-57) $A_{c(N)} = H - [(E_{(n)} - E_{(n-1)})/2]$ (For the topmost layer N)

(NCMA EQ 7-55) $A_{c(n)} = \left(\frac{E_{(n+1)} + E_{(n)}}{2}\right) - \left(\frac{E_{(n)} + E_{(n-1)}}{2}\right)$ (For any intermediate layer n)

Calculate the depth to the midpoint of $A_{c(n)}$ (D_j):

(NCMA EQ 7-58) $D_1 = H - (\frac{A_{c(1)}}{2})$ (For the lowermost layer) $D_1 = 14 \cdot ft$

(NCMA EQ 7-60) $D_N = \frac{A_{c(N)}}{2}$ (For the topmost layer N)

(NCMA EQ 7-59) $D_n = H - [A_{c(1)} + A_{c(2)} + ... + A_{c(n-1)} + (\frac{A_{c(n)}}{2})$ (For any intermediate layer n)

Calculate the stress on the geogrid generated from the soil:

$$F_{gsoil(n)} = \gamma_i D_n K_{a\,\text{int}} A_{c(n)}$$

$$Fgsoil_1 = 588.9 \cdot \frac{lb}{ft}$$

Calculate the stress on the geogrid generated from the surcharge loading:

$$F_{gsurch\arg e(n)} = [q_l + q_d] K_{a\,\text{int}} A_{c(n)}$$

$$Fgsurcharge_1 = 87.63 \cdot \frac{lb}{ft}$$

Calculate the applied tensile loads ($F_{g(n)}$):

$$F_{g(n)} = [F_{gsoil(n)} + F_{gsurch\arg e(n)}]\cos(\delta_i - \omega)$$

$$F_{g_1} = 659.5 \cdot \frac{lb}{ft}$$

$Fgsoil_n =$

43.8	$\cdot \frac{lb}{ft}$
168.3	
294.5	
420.6	
546.8	
673	
657.3	
588.9	

$Fgsurcharge_n =$

109.5	$\cdot \frac{lb}{ft}$
131.4	
131.4	
131.4	
131.4	
131.4	
109.5	
87.6	

$F_{g_n} =$

149.5	$\cdot \frac{lb}{ft}$
292.2	
415.2	
538.2	
661.2	
784.2	
747.5	
659.5	

Determine the factor of safety against tensile overstress ($FSto_n$):

(NCMA EQ 7-62)

$$FS_{to_n} = \frac{LTDS_{(n)}}{F_{g(n)}}$$

$$FS_{to_1} = 2.91$$

The resulting Force in each layer is thus:

$F_{g_n} =$

149.5	$\cdot \frac{lb}{ft}$
292.2	
415.2	
538.2	
661.2	
784.2	
747.5	
659.5	

$LTDS_{Geogrid(n)} =$

1917.9	$\cdot \frac{lb}{ft}$
1917.9	
1917.9	
1917.9	
1917.9	
1917.9	
1917.9	
1917.9	

$FS_{to_n} =$

12.8
6.6
4.6
3.6
2.9
2.4
2.6
2.9

$E_n =$

14	$\cdot ft$
12	
10	
8	
6	
4	
2	
0.7	

$grid(n) =$

"TYPE 1"
"TYPE 1"
"TYPE 1"
"TYPE 1"
"TYPE 1"
"TYPE 1"
"TYPE 1"
"TYPE 1"

ANALYZE PULLOUT OF GEOGRID REINFORCEMENT

Inclination of Coulomb failure surface for internal stability (α_i):

(NCMA EQ 7-50)

$$\alpha_i = a\tan\left[\frac{-\tan(\phi_i - \beta_{\text{int}}) + \sqrt{[\tan(\phi_i - \beta_{\text{int}}) \times (\tan(\phi_i - \beta_{\text{int}}) + \cot(\phi_i + \omega)) \times (1 + \tan(\delta_i - \omega) \times \cot(\phi_i + \omega))]}}{1 + \tan(\delta_i - \omega) \times (\tan(\phi_i - \beta_{\text{int}}) + \cot(\phi_i + \omega))}\right] + \phi_i$$

$\alpha_i = 52.32 \cdot deg$

Anchorage length for nth reinforcement layer ($L_{a(n)}$):

(NCMA EQ 7-64) $$L_{a(n)} = L - W_u - (E_{(n)} \tan(90 - \alpha_i)) + (E_{(n)} \tan(\omega))$$ $L_{a_{Nl}} = 0.44 \cdot ft$

Note that the anchorage length of the top layer is less than the recommended 1 ft.
Adjust the anchorage length to 1 ft and revise length of grid.

$L_{a_n} =$

0.4	$\cdot ft$
1.7	
3	
4.3	
5.6	
6.9	
8.2	
9.1	

$lengthofgrid_n =$

11.1	$\cdot ft$
10.5	
10.5	
10.5	
10.5	
10.5	
10.5	
10.5	

Note: In this example, L = lengthofgrid in EQ 7-64

$L_{a_n} =$

1	$\cdot ft$
1.7	
3	
4.3	
5.6	
6.9	
8.2	
9.1	

$lengthofgrid_n =$

11.1	$\cdot ft$
10.5	
10.5	
10.5	
10.5	
10.5	
10.5	
10.5	

Note: Make sure minimum anchorage requirements are met.

Determine the average depth of overburden (d_n):

Define h_s (CASE A) (see Figure 7-13 of the manual) as the height of soil above the reinforced zone in a broken-back slope condition (for the anchorage length midpoint for every reinforcement):

$$h_{sCASEA} = \left[\left(\frac{E_{(n)}}{\tan(\alpha_i)}\right) - H\tan(\omega) + \frac{L_{a(n)}}{2}\right]\tan(\beta)$$

Compare this height to the previously defined hs (for sloped backfill), then the depth of overburden is:

(NCMA EQ 7-65B) $$d_n = (H - E_{(n)}) + \left[\left(\frac{E_{(n)}}{\tan(\alpha_i)}\right) - H\tan(\omega) + \frac{L_{a(n)}}{2}\right]\tan(\beta)$$ if $h_{sCASEA} < h_s$

(NCMA EQ 7-65A) $$d_{(n)} = (H - E_n) + h_s$$ if $h_{sCASEA} \geq h_s$

$d_1 = 15.5 \cdot ft$

Calculate the anchorage capacity of reinforcement (AC_n):

(NCMA EQ 7-63) $$AC_n = 2L_{a(n)}C_i\left(d_n\gamma_i + q_d\right)\tan\phi_i$$

$AC_1 = 14367 \cdot \frac{lb}{ft}$

Note: The q_d term only applies if EQ 7-28B applies

Determine the factor of safety against pullout ($FS_{po(n)}$):

(NCMA EQ 7-66) $$FS_{po_n} = \frac{AC_{(n)}}{F_{g(n)}}$$

$FS_{po_1} = 21.78$

$AC_n =$

371.6	$\cdot \frac{lb}{ft}$
980.2	
2299.8	
4121.6	
6445.7	
9181.8	
12160.5	
14367	

$Fg_n =$

149.5	$\cdot \frac{lb}{ft}$
292.2	
415.2	
538.2	
661.2	
784.2	
747.5	
659.5	

$FS_{po_n} =$

2.5
3.4
5.5
7.7
9.7
11.7
16.3
21.8

ANALYZE INTERNAL SLIDING

(NCMA EQ 7-76) $$W'_{ri(n)} = L'(H - E_{(n)})\gamma_i$$ $W'_{r_1} = 15960.8 \cdot \frac{lb}{ft}$

Note: The weight $W_{r\beta}$ remains the same as calculated earlier (EQ 7-31) $W'_{r\beta_1} = 1999 \cdot \frac{lb}{ft}$

$C_{ds} = 0.7$

Resultant horizontal and vertical forces due to active earth pressure from soil self-weight (PsH and PsV):

(NCMA EQ 7-67) $$P_{sH(n)} = 0.5K_{aext}\gamma_r(H_{ext} - E_{(n)})^2\cos(\delta_e - \omega)$$ $P_{sH_1} = 3626 \cdot \frac{lb}{ft}$

(NCMA EQ 7-70) $$P_{sV(n)} = 0.5K_{aext}\gamma_r(H_{ext} - E_{(n)})^2\sin(\delta_e - \omega)$$ $P_{sV_1} = 1530 \cdot \frac{lb}{ft}$

The horizontal and vertical earth forces due to a uniformly distributed live load surchage q_l and dead load surcharge q_d active over the retained soil surface:

(NCMA EQ 7-68) $$P_{qdH(n)} = q_d K_{aext}(H_{ext} - E_{(n)})\cos(\delta_e - \omega)$$ $P_{qdH_1} = 369.99 \cdot \frac{lb}{ft}$

(NCMA EQ 7-71) $$P_{qdV(n)} = q_d K_{aext}(H_{ext} - E_{(n)})\sin(\delta_e - \omega)$$ $P_{qdV_1} = 156 \cdot \frac{lb}{ft}$

(NCMA EQ 7-69) $$P_{qlH(n)} = q_l K_{aext}(H_{ext} - E_{(n)})\cos(\delta_e - \omega)$$ $P_{qlH_1} = 554.99 \cdot \frac{lb}{ft}$

(NCMA EQ 7-72) $$P_{qlV(n)} = q_l K_{aext}(H_{ext} - E_{(n)})\sin(\delta_e - \omega)$$ $P_{qlV_1} = 234 \cdot \frac{lb}{ft}$

Compute the active earth force ($Pa_{(n)}$):

(NCMA EQ 7-73) $$P_{aH(n)} = P_{sH(n)} + P_{qdH(n)} + P_{qlH(n)}$$ $P_{aH_1} = 4551 \cdot \frac{lb}{ft}$

(NCMA EQ 7-74) $$P_{aV(n)} = P_{sV(n)} + P_{qdV(n)} + P_{qlV(n)}$$ $P_{aV_1} = 1920 \cdot \frac{lb}{ft}$

Determine the sliding resistance at E_1 ($Rs'_{(n)}$):

(NCMA EQ 7-75) $$R'_{S(n)} = C_{ds}\left(q_d L_\beta + W'_{ri(n)} + W_{r\beta} + P_{sV(n)} + P_{qdV(n)}\right)\tan\phi_i$$ $R'_{s_1} = 8048 \cdot \frac{lb}{ft}$

Weight of segmental retaining wall ($Ww_{(n)}$):

$$W_{W(n)} = (H - E_n)\gamma_u W_u$$

Calculate the shear capacity at E_1 ($Vu_{(n)}$):

(NCMA EQ 7-77) $$V_{u(n)} = a_u + W_{W(n)}\tan\lambda_u$$

In this example, the Shear Capacity is defined as follows:

$$V_{u(n)} = 1100\ lb/ft + W_{W(n)} \tan 35\,\text{deg}$$

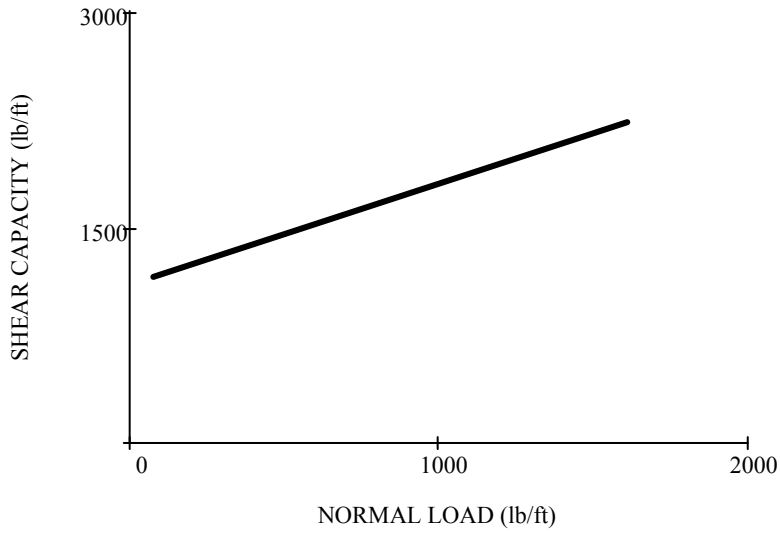

Calculate the factor of safety for sliding ($FS_{sl(n)}$):

(NCMA EQ 7-78)

$$FS_{sl(n)} = \frac{R'_{s(n)} + V_{u(n)}}{P_{aH(n)}}$$

$R'_{s_n} =$	$\cdot \frac{lb}{ft}$	$V_{u_n} =$	$\cdot \frac{lb}{ft}$	$P_{aH_n} =$	$\cdot \frac{lb}{ft}$	$FS_{sl_n} =$
1255		1154		292		8.25
2222		1315		623		5.68
3206		1476		1062		4.41
4210		1637		1610		3.63
5232		1798		2267		3.1
6272		1959		3033		2.71
7331		2120		3907		2.42
8048		2227		4551		2.26

ANALYZE CONNECTION CAPACITY

Determine connection strength for all reinforcement and segmental retaining wall units

Facing connection strength ($T_{conn(n)}$):

(NCMA EQ 7-79) $$T_{conn(n)} = a_{cs} + W_{W(n)} \tan \lambda_{cs}$$

In this example, the following connection capacity will be used for the "TYPE 1" reinforcement:

$$T_{conn(n)} = 991\ lb/ft + W_{W(n)} \tan 25$$ for Normal load less than or equal to 1950 lb/ft

$$T_{connMAX} = 1900\ lb/ft$$ for Normal load greater than 1950 lb/ft

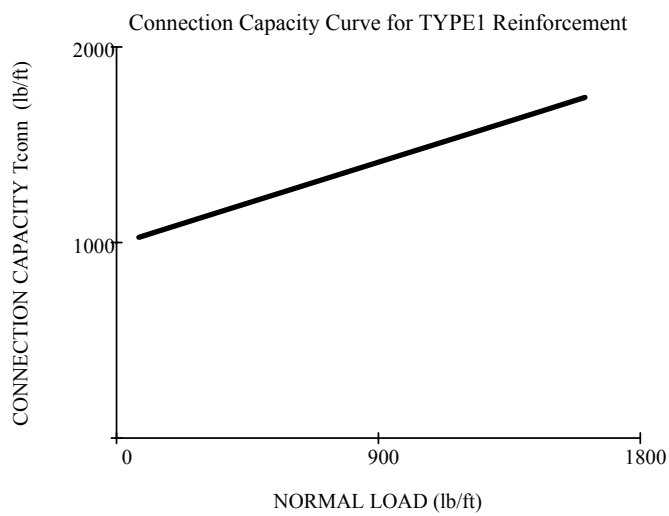

Determine the "zone of influence" of the surcharge on the facing:

Define $h_{doffset}$ and $h_{loffset}$ as the height of soil above the reinforced zone at the location of the surcharge load:

$$h_{doffset} = q_{doffset} \tan \beta$$ $h_{doffset} = 2.33 \cdot ft$

$$h_{loffset} = q_{loffset} \tan \beta$$ $h_{loffset} = 2.33 \cdot ft$

Define $h_{inflmax}$ as the maximum height of soil above the reinforced zone based on a 2V:1H influence line:

(NCMA EQ 7-92) $$h_{inflmax} = \frac{2\left(\frac{H}{2}\tan\beta - H\tan\omega\tan\beta\right)}{2 - \tan\beta}$$ $h_{inflmax} = 3.34 \cdot ft$

(NCMA EQ 7-93)

$$E_{ql\inf} = H - \frac{2q_{loffset} - h_{loffset}}{1 - 2\tan(\omega)}$$

$E_{qlinf} = 4.44 \cdot ft$

(NCMA EQ 7-94)

$$E_{qd\inf} = H - \frac{2q_{doffset} - h_{doffset}}{1 - 2\tan(\omega)}$$

$E_{qdinf} = 4.4 \cdot ft$

If $h_{doffset}$ and/or $h_{loffset} < h_{inflmax}$ (broken back slope crests within the zone of influence, q_d and/or q_l are within the zone of influence and are applied to the wall face up to elevation E_{qdinf} and/or E_{qlinf}

$F_{gcon_n} =$

43	$\cdot \frac{lb}{ft}$
164	
287	
410	
533	
784	
747	
659	

$F_{g_n} =$

149	$\cdot \frac{lb}{ft}$
292	
415	
538	
661	
784	
747	
659	

$V_{uTYPE1_n} =$

1027	$\cdot \frac{lb}{ft}$
1134	
1241	
1349	
1456	
1563	
1670	
1742	

$E_n =$

14	$\cdot ft$
12	
10	
8	
6	
4	
2	
0.67	

In this example, $F_{gcon(n)}$ refers to the tensile requirement of the reinforcement element when the zone of influence is considered. Note that the bottom three elements are affected by the surcharge loads (compared to $F_{g(n)}$), whereas the top five elements are not.

Calculate the factor of safety for each connection ($FS_{coninfl(n)}$):

$E_n =$

14	$\cdot ft$
12	
10	
8	
6	
4	
2	
0.7	

$F_{gcon_n} =$

43	$\cdot \frac{lb}{ft}$
164	
287	
410	
533	
784	
747	
659	

$FS_{coninfl_n} =$

24.04
6.91
4.32
3.29
2.73
1.99
2.23
2.64

$T_{clx_n} =$

1027	$\cdot \frac{lb}{ft}$
1134	
1241	
1349	
1456	
1563	
1670	
1742	

$TorC(n) =$

"Connection"
"Connection"
"Connection"
"Connection"
"Connection"
"Connection"
"Connection"
"Connection"

$grid(n) =$

"TYPE 1"
"TYPE 1"
"TYPE 1"
"TYPE 1"
"TYPE 1"
"TYPE 1"
"TYPE 1"
"TYPE 1"

$LTDS_{Geogrid(n)}$

1918	$\cdot \frac{lb}{ft}$
1918	
1918	
1918	
1918	
1918	
1918	
1918	

$T_{conn}(n) =$

1027	$\cdot \frac{lb}{ft}$
1134	
1241	
1349	
1456	
1563	
1670	
1742	

Calculate crest topling (unreinforced units above top grid layer):

Calculate the horizontal active earth force :

Resultant horizontal force due to active earth pressure from soil self-weight ($P_{sH(z)}$):

(NCMA EQ 7-83) $$P_{sH(z)} = 0.5K_{a\,\text{int}}\gamma_i z_u^{\ 2}\cos(\delta_i - \omega)$$ $$P'sh_N = 7\cdot\frac{lb}{ft}$$

Resultant horizontal force due to active earth pressure from uniform surchage, q_l+q_d ($P_{q(z)}$)

(NCMA EQ 7-82) $$P_{qlH(z)} = q_l K_{a\,\text{int}} z_u \cos(\delta_i - \omega)$$

(NCMA EQ 7-82) $$P_{qdH(z)} = q_d K_{a\,\text{int}} z_u \cos(\delta_i - \omega)$$

If the depth to the bottom of the unit is above the elevation of the zone of influence, then the horizontal components of the surcharge load are not taken into account. In this example, the zone of influence is below the units being analyzed, therefore the surcharge loads do not apply.

Resultant vertical force due to active earth pressure from soil self weight ($P_{sV(z)}$):

(NCMA EQ 7-85) $$P_{sV(z)} = 0.5K_{a\,\text{int}}\gamma_i z_u^{\ 2}\sin(\delta_i - \omega)$$ $$P'sv_N = 1.6\cdot\frac{lb}{ft}$$

Resultant vertical force due to active earth pressure from uniform surcharge ($P_{qV(z)}$):

(NCMA EQ 7-87) $$P_{qlV(z)} = q_l K_{a\,\text{int}} z_u \sin(\delta_i - \omega)$$ $$P'qlv_N = 5.86\cdot\frac{lb}{ft}$$

(NCMA EQ 7-86) $$P_{qdV(z)} = q_d K_{a\,\text{int}} z_u \sin(\delta_i - \omega)$$ $$P'qdv_N = 3.91\cdot\frac{lb}{ft}$$

If the depth to the bottom of the unit is above the elevation of the zone of influence, then the vertical components of the surcharge load are not taken into account. In this example, the zone of influence is below the units being analyzed, therefore the surcharge loads do not apply.

Weight of blocks above top grid:

$$W_{w(z)} = z_u \gamma_u W_u$$

moment arm of units' resistance to overturning/crest toppling:

(NCMA EQ 7-90) $$X_{w(z)} = G_u + (0.5z_u \tan\omega) - 0.5\Delta_u$$

(NCMA EQ 7-89) $$M_{r(z)} = W_{w(z)}X_{w(z)} + P_{sV(Z)}(W_u + \frac{z_u}{3}\tan\omega) + P_{qdV(z)}(W_u + \frac{z_u}{2}\tan\omega)$$

Driving moment ($M_{o(z)}$):

(NCMA EQ 7-91) $$M_{O(z)} = P_{sH(z)}\frac{z_u}{3} + P_{qH(z)}\frac{z_u}{2}$$

Determine the Factor of Safety for Overturning ($FS_{ot(k)}$):

(NCMA EQ 7-88)

$$FS_{ot(k)} = \frac{Mr_k}{Mo_k}$$

Results of Internal Stability Anylysis:

$Ka_{int} = 0.263$ $\alpha_i = 52.324 \cdot deg$

SRW unit #: $srw_n =$	Elevation: $E_n =$	Length: $lengthofgrid_n$	Anchor length: $L_{a_n} =$	FOS Overstress: $FS_{to_n} =$	FOS Pullout: $FS_{po_n} =$	FOS Sliding: $FS_{sl_n} =$	Grid Type: $grid(n) =$	Allowable Strength: $LTDS_{Geogrid(n)}$
21	14 $\cdot ft$	11.1 $\cdot ft$	1 $\cdot ft$	12.8	2.5	8.3	"TYPE 1"	1918 $\cdot \frac{lb}{ft}$
18	12	10.5	1.73	6.6	3.4	5.7	"TYPE 1"	1918
15	10	10.5	3.03	4.6	5.5	4.4	"TYPE 1"	1918
12	8	10.5	4.32	3.6	7.7	3.6	"TYPE 1"	1918
9	6	10.5	5.62	2.9	9.7	3.1	"TYPE 1"	1918
6	4	10.5	6.91	2.4	11.7	2.7	"TYPE 1"	1918
3	2	10.5	8.21	2.6	16.3	2.4	"TYPE 1"	1918
1	0.67	10.5	9.07	2.9	21.8	2.3	"TYPE 1"	1918

Tensile/ Connection Load: $F_{g_n} =$	Pullout Capacity: $AC_n =$	Sliding Force: $P_{aH_n} =$	$P_{aV_n} =$	Sliding Capacity: $Sc_n =$	$R'_{s_n} =$
149 $\cdot \frac{lb}{ft}$	372 $\cdot \frac{lb}{ft}$	292 $\cdot \frac{lb}{ft}$	123 $\cdot \frac{lb}{ft}$	2409 $\cdot \frac{lb}{ft}$	1255 $\cdot \frac{lb}{ft}$
292	980	623	263	3536	2222
415	2300	1062	448	4682	3206
538	4122	1610	679	5847	4210
661	6446	2267	957	7030	5232
784	9182	3033	1280	8231	6272
747	12160	3907	1649	9451	7331
659	14367	4551	1920	10275	8048

Tensile/ Connection Load: $F_{g_n} =$	Tensile Load w/Surcharge Influence $F_{gcon_n} =$	Connection Capacity (peak): $T_{conn}(n) =$	$FOS_{Connection}$ w/surcharge influence: $FS_{coninfl_n} =$
149 $\cdot \frac{lb}{ft}$	43 $\cdot \frac{lb}{ft}$	1027 $\cdot \frac{lb}{ft}$	24
292	164	1134	6.9
415	287	1241	4.3
538	410	1349	3.3
661	533	1456	2.7
784	784	1563	2
747	747	1670	2.2
659	659	1742	2.6

$E_{lfacialinfl} = 4.44 \cdot ft$

$E_{dfacialinfl} = 4.44 \cdot ft$

Results of Facing Stability Analyses (Crest toppling)

Note: Only the top unsupported blocks (blocks located above the uppermost geogrid layer) are considered in the analysis

SRW Unit #:	Heel Elevation:	Driving Moment:	Resisting Moment:	FOS Overturning:
$unit_{pp} =$	$Elev_{pp} =$	$Mdo_{pp} =$	$Mrr_{pp} =$	$FSovt_{pp} =$
22	14 $\cdot ft$	1.5 $\cdot lb$	39.9 $\cdot lb$	26.3

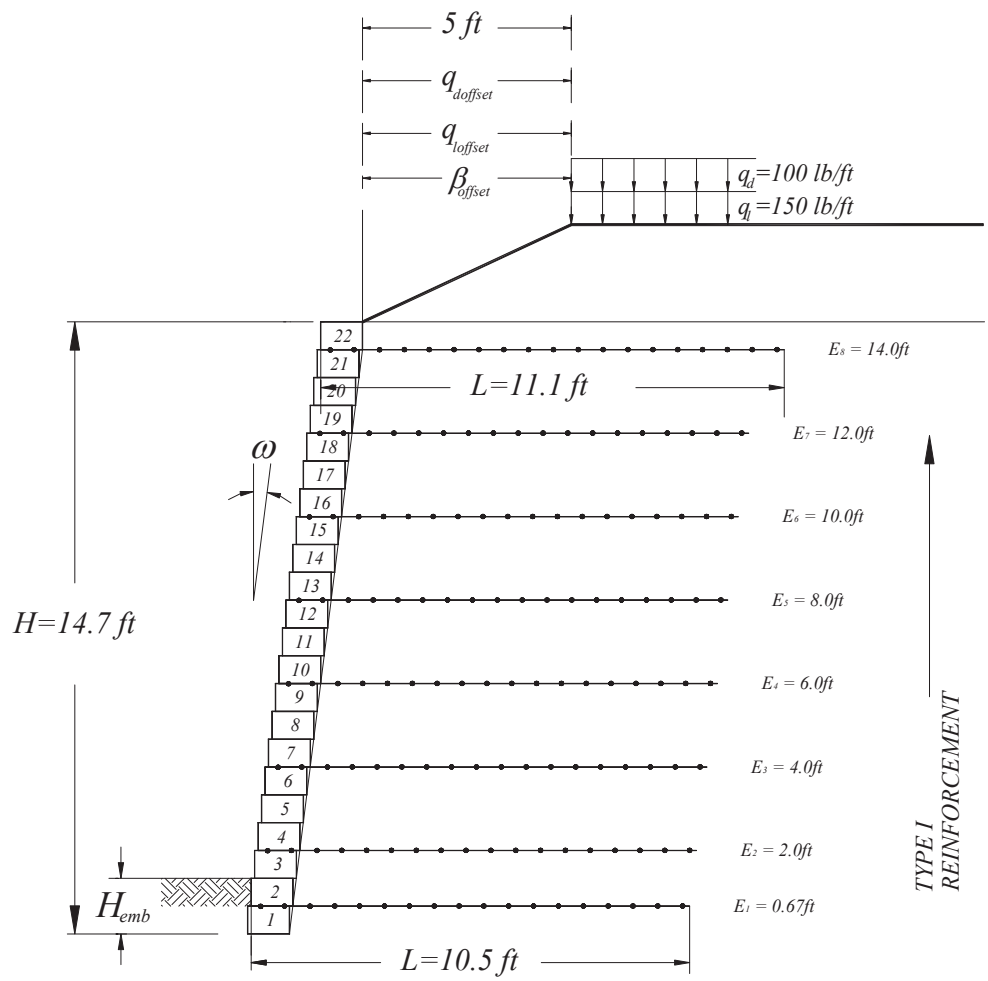

SAMPLE PROBLEM (SEISMIC)

EXTERNAL

Note:	DA=0, no displacement analysis DA=1, displacement analysis

Displacement analysis is considered: $DA = 1$

Allowable deformation (in.): $d_{sei} = 3 \quad inches$

Maximum earthquake acceleration factor: $A = 0.2$

(NCMA EQ 9-23) $$k_{hext} = \frac{A}{2}$$

(NCMA EQ 9-24) $$k_{hext} = 0.74A\left(\frac{A}{d_{seismic}}\right)^{0.25}$$ if displacement analysis is considered

$k_{h.ext} = 0.075$

Seismic inertia angle:

(NCMA EQ 9-48) $$\theta_{ext} = a\tan(k_{hext})$$

$\Theta_{ext} = 4.3 \cdot deg$

Dynamic earth pressure coefficient:

(NCMA EQ 9-47) $$K_{aEext} = \frac{\cos^2(\phi_r + \omega - \theta_{ext})}{\cos\theta_{ext}\cos^2\omega\cos(\delta_e - \omega + \theta_{ext})\left[1 + \sqrt{\frac{\sin(\phi_r + \delta_e)\sin(\phi_r - \beta_{ext} - \theta_{ext})}{\cos(\delta_e - \omega + \theta_{ext})\cos(\omega + \beta_{ext})}}\right]^2}$$

$K_{AE.ext} = 0.296$

(NCMA EQ 9-9) $$\Delta K_{dyn} = K_{aE} - K_a$$

$\Delta K_{dyn.ext} = 0.05$

$$P_{aE} = 0.5K_{aEext}\gamma_r H_{ext}^{\ 2}$$

$P_{AE} = 5135 \cdot \frac{lb}{ft}$

HORIZONTAL COMPONENTS OF EARTH PRESSURE COEFFICIENTS

$$K_{aHext} = K_{aext} \cdot cos(\delta_e - \omega)$$ (static condition)

$K_{aHext} = 0.227$

(NCMA EQ 9-49) $$K_{aEHext} = K_{aEext}\cos(\delta_e - \omega)$$

$K_{AEH.ext} = 0.2729$

(NCMA EQ 9-50) $$\Delta K_{dynHext} = (K_{aEext} - K_{aext})\cos(\delta_e - \omega) = \Delta K_{dynext}\cos(\delta - \omega)$$

$\Delta K_{dynH.ext} = 0.046$

VERTICAL COMPONENTS OF EARTH PRESSURE COEFFICIENTS

(NCMA EQ 9-54) $$K_{aVext} = K_{aext} \cdot sin(\delta_e - \omega)$$ (static condition)

$K_{aVext} = 0.096$

(NCMA EQ 9-54) $$K_{aEVext} = K_{aEext}\sin(\delta_e - \omega)$$

$K_{AEV.ext} = 0.115$

(NCMA EQ 9-55) $$\Delta K_{dynVext} = (K_{aEext} - K_{aext})\sin(\delta_e - \omega) = \Delta K_{dynext}\sin(\delta - \omega)$$

$\Delta K_{dynV.ext} = 0.02$

HORIZONTAL COMPONENTS OF EARTH PRESSURE

(NCMA EQ 9-16) $P_{sH} = 0.5K_{aH}\gamma_r H^2$ (static condition) $P_{sH} = 3928 \cdot \frac{lb}{ft}$

(NCMA EQ 9-51) $P_{aEH} = 0.5K_{aEHext}\gamma_r H_{ext}{}^2 = P_{aE}\cos(\delta_e - \omega)$ $P_{AEH} = 4731 \cdot \frac{lb}{ft}$

VERTICAL COMPONENTS OF EARTH PRESSURE

(NCMA EQ) $P_{sV} = 0.5K_{aV}\gamma H^2$ (static condition) $P_{sV} = 1657 \cdot \frac{lb}{ft}$

(NCMA EQ 9-56) $P_{aEV} = 0.5K_{aEVext}\gamma_r H_{ext}{}^2 = P_{aE}\sin(\delta_e - \omega)$ $P_{AEV} = 1996 \cdot \frac{lb}{ft}$

Determine dynamic external earth pressures

(NCMA EQ 9-52) $\Delta P_{dynH} = 0.5\Delta K_{dynH}\gamma_r H_{ext}{}^2 = P_{aEH} - P_{sH}$ $\Delta P_{dynH} = 803 \cdot \frac{lb}{ft}$

(NCMA EQ 9-57) $\Delta P_{dynV} = 0.5\Delta K_{dynv}\gamma_r H_{ext}{}^2 = P_{aEV} - P_{sV}$ $\Delta P_{dynV} = 339 \cdot \frac{lb}{ft}$

Determine total horizontal and vertical components of earth pressures (static and dynamic)

(NCMA EQ 9-53) $P_{aEHext} = P_{sH} + P_{qdH} + 0.5\Delta P_{dynH}$ $P_{AEH.ext} = 4714 \cdot \frac{lb}{ft}$

(NCMA EQ 9-58) $P_{aEVext} = P_{sV} + P_{qdV} + 0.5\Delta P_{dynV}$ $P_{AEV.ext} = 1989 \cdot \frac{lb}{ft}$

DETERMINE WEIGHTS AND MOMENT ARMS FOR RESISTANCE AND INERTIAL FORCES CALCS

Weight of face and reinforced soil
(from static)

(NCMA EQ 7-30) $W_{ri} = L\gamma_i H$ $W_{ri} = 18481 \cdot \frac{lb}{ft}$

Determine weight of slope above
reinforced mass:
(dependant on top-of-wall geometry)

(NCMA EQ 7-31A) $W_{r\beta} = W_{r\beta 1} + W_{r\beta 2} + W_{r\beta 3}$ (for broken-back slope condition)

(NCMA EQ 7-31B) $W_{r\beta} = \frac{L'\gamma_i h}{2} = \frac{L'\gamma_i L_\beta \tan\beta}{2}$ (for continuous slope condition)

Determine weights of pieces of broken soil slope:

(NCMA EQ 7-31A1) $W_{r\beta 1} = \frac{\beta_{offset} \times h_s}{2} \times \gamma_i$ (for broken-back slope condition) $W_{r\beta 1} = 699.46 \cdot \frac{lb}{ft}$

(NCMA EQ 7-31A2) $W_{r\beta 2} = \left[\left(L' - \beta_{offset}\right) \times h_s\right] \times \gamma_i$ (for broken-back slope condition) $W_{r\beta 2} = 1259 \cdot \frac{lb}{ft}$

(NCMA EQ 7-31A3) $W_{r\beta 3} = \frac{h_s{}^2 \times \tan(\omega)}{2} \times \gamma_i$ (for broken-back slope condition) $W_{r\beta 3} = 40.77 \cdot \frac{lb}{ft}$

Determine resisting moment arms soil in slope above reinforced mass

(NCMA EQ 7-36B) $X_{r\beta} = H\tan(\omega) + W_u + \frac{2}{3}L'$ (for continuous slope condition) $X_{r\beta} = 9.17 \cdot ft$

(NCMA EQ 7-36A1) $X_{r\beta 1} = H\tan(\omega) + W_u + \frac{2}{3}\beta_{offset}$ (for broken-back slope condition) $X_{r\beta 1} = 6.17 \cdot ft$

(NCMA EQ 7-36A2) $X_{r\beta 2} = H\tan(\omega) + W_u + \beta_{offset} + \frac{L' - \beta_{offset}}{2}$ (for broken-back slope condition) $X_{r\beta 2} = 10.08 \cdot ft$

(NCMA EQ 7-36A3) $X_{r\beta 3} = H\tan(\omega) + W_u + L' + \frac{h_s \tan(\omega)}{3}$ (for broken-back slope condition) $X_{r\beta 3} = 12.43 \cdot ft$

Determine height of slope for reduced width of reinforced mass used for intertial calcs

(NCMA EQ 9-61) $L''_{0.5H} = \frac{(0.5H - W_u)\tan(\beta)\tan(\omega)}{1 - \tan(\beta)\tan(\omega)}$ $L''_{0.5H} = 0.39 \cdot ft$

(NCMA EQ 9-62) $h' = (0.5H - W_u + L''_{0.5H})\tan(\beta)$ $h' = 3.14 \cdot ft$

Determine weights for inertial forces, including reduced width (0.5*H*) reinforced mass

(NCMA EQ 9-60) $W'_i = (0.5H - W_u)H\gamma_i$ $W'_i = 11148 \cdot \frac{lb}{ft}$

Determine driving moment arms of soil in slope above reduced 0.5*H* reinforced soil mass (for inertial forces)

(NCMA EQ 9-65) $Y_{\beta 1} = H + \frac{h_s}{3}$ $Y'_{\beta 1} = 15.44 \cdot ft$

(NCMA EQ 9-66) $Y'_{\beta 2} = H + \frac{h_s}{2}$ $Y'_{\beta 2} = 15.83 \cdot ft$

(NCMA EQ 9-67) $Y_{\beta 3} = H + \frac{2}{3}h_s$ $Y'_{\beta 3} = 16.22 \cdot ft$

(NCMA EQ 9-69) $Y'_{\beta} = H + \frac{h'}{3}$ $Y'_{\beta} = 15.71 \cdot ft$

If slope breaks before 0.5H-Wu, ($h_S < h'$), then $W_{\beta 2}$ for inertial soil mass (0.5*H* widht) is modified to $W'_{\beta 2}$, while $W_{\beta 1}$ and $W_{\beta 3}$ remain the same as they are above for entire reinforced mass

(NCMA EQ 9-64) $W'_{r\beta 2} = \left[\left(0.5H - W_u - \beta_{offset}\right) \times h_s\right] \times \gamma_i$ $W'_{r\beta 2} = 373.15 \cdot \frac{lb}{ft}$

Determine reduced weight of slope above reduced width reinforced mass (0.5*H* wide) of inertial forces

(NCMA EQ 9-63) $W'_{\beta} = W_{r\beta 1} + W'_{r\beta 2} + W_{r\beta 3}$ for $h_s < h'$

(NCMA EQ 9-68) $W'_{\beta} = \frac{(0.5H - W_u)h'}{2}\gamma_i$ for $h_s \geq h'$

$W'_{\beta} = 1113 \cdot \frac{lb}{ft}$

External Sliding

$C_{ds} = 1$

Sliding resistance at base of soil reinforced SRW (R_s)

If reinforced (infill) soil controls:

(NCMA EQ 9-70A) $$R_{sw(dyn)} = C_{ds}\left(q_d L_\beta + W_{r(i)} + W_{r(\beta)} + (P_{s(V)} + P_{qd(V)} + (0.5\Delta P_{dynV}))\right)\tan\phi_i$$

If drainage soil controls:

(NCMA EQ 9-70B) $$R_{sw(dyn)} = C_{ds}\left(q_d L_\beta + W_{r(i)} + W_{r(\beta)} + (P_{s(V)} + P_{qd(V)} + (0.5\Delta P_{dynV}))\right)\tan\phi_d$$

If foundation soil controls:

(NCMA EQ 9-70C) $$R_{sw(dyn)} = C_{ds}[c_f L + \left(q_d L_\beta + W_{r(i)} + W_{r(\beta)} + \left(P_{s(V)} + P_{qd(V)} + (0.5\Delta P_{dynV})\right)\right)\tan\phi_f]$$

$R_{seismic} = 13127 \cdot \frac{lb}{ft}$

Determine inertial driving forces of wall face and reinforced soil mass

(NCMA EQ 9-59) $$P_{ir} = k_{h(ext)}(W_w + W_i' + W_\beta')$$ $P_{IR} = 1049 \cdot \frac{lb}{ft}$

Calculate $FS_{sl(seismic)}$

(NCMA EQ 9-71) $$FS_{sl(seismic)} = \frac{R_{sw(dyn)}}{P_{ir} + P_{sH} + P_{qdH} + (0.5\Delta P_{dynH})}$$ $FSsl_{seismic} = 2.28$

Overturning

Calculate resisting moments of soil slope

(part of NCMA EQ 7-34A) $M_{r\beta} = W_{r\beta 1}X_{r\beta 1} + W_{r\beta 2}X_{r\beta 2} + W_{r\beta 1}X_{r\beta 3}$ if $h_s \le h$

(part of NCMA EQ 7-34B) $M_{r\beta} = W_{r\beta}X_{r\beta}$ if $h_s > h$

$M_{r\beta} = 17515 \cdot lb$

Calculate driving moment of reduced inertial soil slope weight

(NCMA EQ 9-74A) $M'_\beta = W_{r\beta 1}Y_{\beta 1} + W'_{r\beta 2}Y_{\beta 2} + W_{r\beta 3}Y_{\beta 3}$ if $h_s \le h$

(NCMA EQ 9-74B) $M'_\beta = W'_\beta Y'_\beta$ if $h_s > h$

$M'_\beta = 17372 \cdot lb$

Calculate resistance to overturning moment

(NCMA EQ 9-72) $$M_{r(seismic)} = M_r + 0.5\Delta P_{dynV}[L + \frac{H_{ext}}{2}\tan(\omega)]$$ $M_{rseismic} = 156133 \cdot lb$

Calculate driving moment arm of inertial forces

(NCMA EQ 9-75) $$h_{ir} = \frac{k_{h(ext)}W_w\frac{H}{2} + k_{h(ext)}W_i'\frac{H}{2} + k_{h(ext)}M'_\beta}{P_{ir}}$$ $h_{IR} = 7.99 \cdot ft$

Calculate driving overturning moment (dynamic earth pressure considered uniform for whole height, so working a 0.5 H_{ext}

(NCMA EQ 9-73) $$M_{O(seismic)} = P_{sH}Y_s + P_{qdH}Y_q + 0.5\Delta P_{dynH}Y_q + P_{ir}h_{ir}$$ $M_{oseismic} = 37327 \cdot lb$

(NCMA EQ 9-76) $$FS_{ot(seismic)} = \frac{M_{r(seismic)}}{M_{o(seismic)}}$$ $FSot_{seismic} = 4.18$

Seismic Bearing Capacity

(NCMA EQ 9-77) $$e_{seismic} = \frac{L}{2} - \frac{M_{r(seismic)} - M_{o(seismic)}}{(W_{r(i)} + W_{r(\beta)} + q_d L_\beta) + (P_{sV} + P_{qdV} + 0.5\Delta P_{dynV})}$$ $e_{seismic} = 0.024 \cdot ft$

(NCMA EQ 9-78) $$B_{seismic} = L - 2e_{seismic}$$ $B_{seismic} = 10.451 \cdot ft$

(NCMA EQ 9-79) $$Q_{seismic} = \frac{(W_{r(i)} + W_{r(\beta)} + q_d L_\beta) + (P_{sV} + P_{qdV} + 0.5\Delta P_{dynV})}{B_{seismic}}$$ $Q_{seismic} = 2175 \cdot \frac{lb}{ft^2}$

(NCMA EQ 12-12) $$Q_{ult} = 0.5 N_\gamma \gamma_f B_{seismic} + \gamma_f H_{emb} N_q + c_f N_c$$ $Q_{ultseismic} = 16984.5 \cdot \frac{lb}{ft^2}$

(NCMA EQ 12-13) $$FS_{bc\,seismic} = \frac{Q_{ultseismic}}{Q_{seismic}}$$ $FS_{bcseismic} = 7.81$

SUMMARY OF RESULTS

Results of External Stability Analysis (Seismic): $K_{AE.ext} = 0.296$ $\alpha_e = 52.041 \cdot deg$

Total Horizontal Force: $P_{AEH.conv} = 4731 \cdot \frac{lb}{ft}$ $P_{sH} = 3928 \cdot \frac{lb}{ft}$ $\Delta P_{dynH} = 803 \cdot \frac{lb}{ft}$

Total Vertical Force: $P_{AEV.conv} = 1996 \cdot \frac{lb}{ft}$ $P_{sV} = 1657 \cdot \frac{lb}{ft}$ $\Delta P_{dynV} = 339 \cdot \frac{lb}{ft}$ $r_{seismic} = 22735.9 \cdot \frac{lb}{ft}$

Sliding Resistance: $R_{seismic} = 13127 \cdot \frac{lb}{ft}$

FOS Sliding: $FSsl_{seismic} = 2.28$

Driving Moment: $M_{oseismic} = 37327 \cdot lb$

FOS Overturning: $FSot_{seismic} = 4.18$

Resisting Moment: $M_{rseismic} = 156133 \cdot lb$

FOS Bearing Capacity: $FS_{bcseismic} = 7.81$

Bearing Capacity: $Q_{ultseismic} = 16984.5 \cdot \frac{lb}{ft^2}$

Base Reinforcement length: $L = 10.5 \cdot ft$

Maximum Bearing Pressure: $Q_{seismic} = 2175 \cdot \frac{lb}{ft^2}$

Base Eccentricity: $e_{seismic} = 0.02 \cdot ft$

SEISMIC INTERNAL

(NCMA EQ 9-22) $k_{h\,\text{int}} = (1.45 - A)A$ for $A \le 0.45g$

$k_{h\,\text{int}} = A$ for $A > 0.45g$ $\qquad k_{h.int} = 0.25$

$\Theta_{int} = atan(k_{h.int})$

$\beta_{intMAX} = \phi_i - \Theta_{int}$ $\qquad \beta_{intMAX} = 15.96 \cdot deg$

(NCMA EQ 9-80)

$$K_{aE\,\text{int}} = \frac{\cos^2(\phi_i + \omega - \theta_{\text{int}})}{\cos\theta_{\text{int}}\cos^2\omega\cos(\delta_i - \omega + \theta_{\text{int}})\left[1 + \sqrt{\frac{\sin(\phi_i + \delta_i)\sin(\phi_i - \beta_{\text{int}} - \theta_{\text{int}})}{\cos(\delta_i - \omega + \theta_{\text{int}})\cos(\omega + \beta_{\text{int}})}}\right]^2}$$

$K_{AE.int} = 0.495$

$\Delta K_{dyn.int} = K_{AE.int} - Ka_{int}$ $\qquad \Delta K_{dyn.int} = 0.2321$

$K_{AEH.int} = K_{AE.int} \cdot cos(\delta_i - \omega)$ $\qquad K_{AEH.int} = 0.4825$

(NCMA EQ 9-81) $\Delta K_{dynH\,\text{int}} = (K_{aE\,\text{int}} - K_{a\,\text{int}})\cos(\delta_i - \omega)$ $\qquad \Delta K_{dynH.int} = 0.2263$

$K_{AEV.int} = K_{AE.int} \cdot sin(\delta_i - \omega)$ $\qquad K_{AEV.int} = 0.11$

$\Delta K_{dynV.int} = \Delta K_{dyn.int} \cdot sin(\delta_i - \omega)$ $\qquad \Delta K_{dynV.int} = 0.052$

Increase temp grid strengths during seismic event by removing creep reduction factor

(NCMA EQ 9-88) $LTDS_{seismic(n)} = LTDS_{(n)} \times RF_{cr}$

Weight wall unit face in contributorty area

(NCMA EQ 9-85) $\Delta W_{w(n)} = A_{c(n)} W_u \gamma_u$

(NCMA EQ 9-86) $F_{dyn(n)} = 0.5\Delta K_{dynH\,\text{int}} A_{c(n)} \gamma_i H$ uniform distribution of internal dynamic load across contributory areas

(NCMA EQ 9-84) $F_{gstat(n)} = [\gamma_i D_n + q_d] K_{a\,\text{int}} A_{c(n)} \cos(\delta_i - \omega)$ includes static dead load contribution

Total tensile load requirement:

(NCMA EQ 9-83) $F_{i(n)} = k_{h(\text{int})} \Delta W_{w(n)} + F_{gstat(n)} + F_{dyn(n)}$

$F_{gstat.i_n} =$

85.43	$\cdot \frac{lb}{ft}$
215.28	
338.29	
461.31	
584.32	
707.34	
683.42	
608.24	

$F_{dyn.i_n} =$

331.87	$\cdot \frac{lb}{ft}$
398.24	
398.24	
398.24	
398.24	
398.24	
331.87	
265.49	

Tensile Overstress

(NCMA EQ 9-87) $$FS_{toseismic_{(n)}} = \frac{LTDS_{seismic_{(n)}}}{F_{i(n)}}$$

$LTDS_{seismic_{Geogrid(n)}} :$

3030	$\cdot \frac{lb}{ft}$
3030	
3030	
3030	
3030	
3030	
3030	
3030	

$F_{i_n} =$

465	$\cdot \frac{lb}{ft}$
671	
794	
917	
1040	
1163	
1063	
912	

$F_{dyn.i_n} =$

332	$\cdot \frac{lb}{ft}$
398	
398	
398	
398	
398	
332	
265	

$F_{gstat.i_n} =$

85	$\cdot \frac{lb}{ft}$
215	
338	
461	
584	
707	
683	
608	

$FS_{to.seismic_n} =$

6.51
4.52
3.82
3.3
2.91
2.61
2.85
3.32

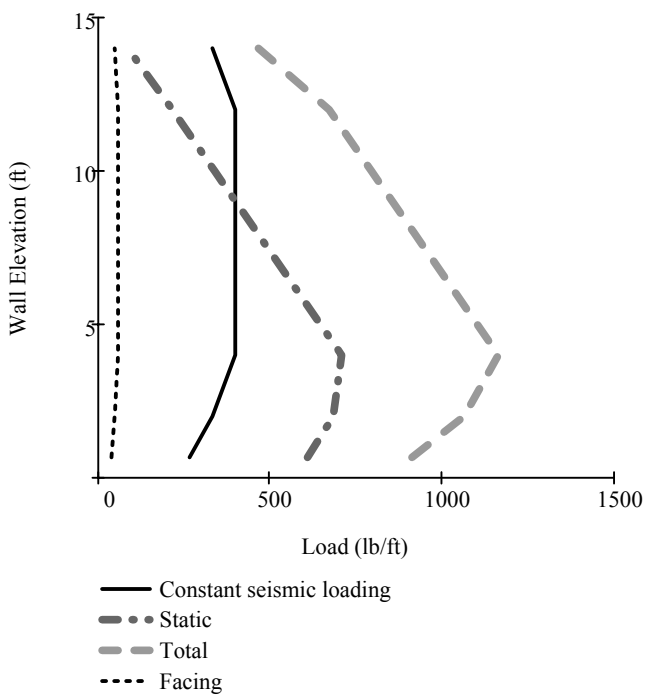

Pullout

(NCMA EQ 9-89) $$FS_{po(seismic)_{(n)}} = \frac{AC_{(n)}}{F_{i(n)}}$$

$AC_n =$		$F_{i_n} =$		$FS_{po.seismic_n} =$
372	$\cdot \frac{lb}{ft}$	465.21	$\cdot \frac{lb}{ft}$	0.8
980		671.02		1.5
2300		794.04		2.9
4122		917.05		4.5
6446		1040.07		6.2
9182		1163.08		7.9
12160		1063.21		11.4
14367		912.07		15.8

* The top reinforcement layer needs to be increased to meet minimum safety factor of 1.1.

$lengthofgrid_n =$		$AC_n =$		$FS_{po.seismic_n} =$
* 11.5	$\cdot ft$	* 535	$\cdot \frac{lb}{ft}$	* 1.2
10.5		980		1.5
10.5		2300		2.9
10.5		4122		4.5
10.5		6446		6.2
10.5		9182		7.9
10.5		12160		11.4
10.5		14367		15.8

Internal Sliding

Redefine C_{ds} to match actual grid properties for internal analysis

$C_{ds} = 0.7$

Determine horizontal and vertical dynamic earth pressures calculating at each grid elevation (calculated in same manner as external sliding loads are)

(NCMA EQ 9-90) $$\Delta P_{dynH(n)} = 0.5\Delta K_{dynH}\gamma_r(H_{ext} - E_{(n)})^2$$

(NCMA EQ 9-91) $$\Delta P_{dynV(n)} = 0.5\Delta K_{dynV}\gamma_r(H_{ext} - E_{(n)})^2$$

Define weights for resisting forces and inertial forces on wall

(NCMA EQ 7-76) $$W'_{r(n)} = L' \times (H - E_{(n)}) \times \gamma_i$$

(NCMA EQ 9-95) $$\Delta W'_i = (0.5H - W_u)(H_{ext} - E_{(n)})\gamma_i$$

(NCMA EQ 9-94) $$\Delta W_{w(n)} = \gamma_u (H_{ext} - E_{(n)}) W_u$$

$\Delta W_{i_n} =$

760	$\cdot \frac{lb}{ft}$
3040	
5320	
7600	
9880	
12161	
14441	
15961	

$\Delta W'_{i_n} =$

507	$\cdot \frac{lb}{ft}$
2027	
3547	
5067	
6587	
8108	
9628	
10641	

$\Delta W_{W_n} =$

77	$\cdot \frac{lb}{ft}$
307	
537	
767	
997	
1227	
1457	
1610	

$W_\beta = 1999 \cdot \frac{lb}{ft}$

Determine inertial forces from weight of wall system

(NCMA EQ 9-93) $$\Delta P_{ir(n)} = k_{h(ext)} (\Delta W_{w(n)} + \Delta W'_{i(n)} + W'_\beta)$$

Determine resistance to sliding at each grid layer

(NCMA EQ 9-92) $$R'_{swdyn} = C_{ds} [W'_{r(n)} + W_\beta + q_d L_\beta + [P_{sV(n)} + P_{qdV(n)} + (0.5 \Delta P_{dynV})_{(n)}]] \tan \phi_r + V_{u(n)}$$

$R'_{swdyn_n} =$

2411	$\cdot \frac{lb}{ft}$
3542	
4694	
5866	
7058	
8271	
9505	
10338	

$P_{qdH_n} =$

68	$\cdot \frac{lb}{ft}$
113	
159	
204	
249	
294	
340	
370	

$P_{sH_n} =$

122	$\cdot \frac{lb}{ft}$
340	
666	
1101	
1644	
2297	
3058	
3626	

$(0.5 \Delta P_{dynH})_n =$

12	$\cdot \frac{lb}{ft}$
35	
68	
113	
168	
235	
313	
371	

$\Delta P_{IR_n} =$

128	$\cdot \frac{lb}{ft}$
259	
391	
522	
654	
786	
917	
1005	

$SlidingForce_n =$

330	$\cdot \frac{lb}{ft}$
747	
1283	
1939	
2716	
3612	
4628	
5371	

Determine *FS* internal sliding

(NCMA EQ 9-96) $$FS_{slseismic_{(n)}} = \frac{R'_{s_seismic(n)}}{P_{sH(n)} + P_{qdH(n)} + 0.5 \Delta P_{dynH(n)} + \Delta P_{ir(n)}}$$

$FS_{sl.seismic_1} = 1.92$

Connection

Figure connection loads, same as load on grid F_i but static load reduced if there is an offset dead load surcharge and connection elevation is is above its influence, use reduce dead surcharge connection load from static calcs, $Fgdsurchargecon_{v3_n}$ to figure total seismic connection loads

(NCMA EQ 9-97) $$FS_{conseismic_{(n)}} = \frac{T_{conn_{(n)}}}{F_{i(n)}}$$

$T_{conn}(n) =$

1027	$\cdot \frac{lb}{ft}$
1134	
1241	
1349	
1456	
1563	
1670	
1742	

$F_{icon_n} =$

423	$\cdot \frac{lb}{ft}$
620	
743	
866	
989	
1163	
1063	
912	

$FS_{con.seismic_n} =$

2.43
1.83
1.67
1.56
1.47
1.34
1.57
1.91

(where F_{icon} has been revised to take into account the zone of influence)

Crest Toppling

(NCMA EQ 9-98) $$\Delta P_{dynHz} = 0.5 \Delta K_{dynH} \gamma_i z^2$$

(NCMA EQ 9-99) $$\Delta P_{dynVz} = 0.5 \Delta K_{dynV} \gamma_i z^2$$

Determine resisting and driving moments at each unit elevation

(NCMA EQ 9-100) $$M_{rseismic(z)} = W_{w(z)} X_{w(z)} + P_{sV(z)} \left(W_u + \left(\frac{z}{3} \right) \tan(\omega) \right) + \left[(P_{qdV(z)} + 0.5 \Delta P_{dynV(z)}) \left(W_u + \left(\frac{z}{2} \right) \tan(\omega) \right) \right]$$

(NCMA EQ 9-101) $$M_{oseismic(z)} = k_{h\,\mathrm{int}} W_{w(z)} \left(\frac{z}{2} \right) + P_{sH(z)} \left(\frac{z}{3} \right) + P_{qdH(z)} \left(\frac{z}{2} \right) + 0.5 \Delta P_{dynH(z)} \left(\frac{z}{2} \right)$$

Determine *FS* crest toppling

(NCMA EQ 9-102) $$FS_{ctseismic(z)_z} = \frac{M_{rseismic(z)}}{M_{oseismic(z)}}$$

$M_{r.dyn_{pp}} =$ 40.66 $\cdot lb$

$M_{o.dyn_{pp}} =$ 8.914 $\cdot lb$

$FS_{ct.seismic_{pp}} =$ 4.56

Results of Internal Stability Anylysis (SEISMIC):

$K_{AE.int} = 0.495$ $\alpha_i = 52.324 \cdot deg$

SRW unit #: $srw_n =$	Elevation: $E_n =$	Length: $lengthofgrid_n$	Anchor length: $La_n =$	FOS Overstress: $FS_{to.seismic_n}$	FOS Pullout: $FS_{po.seismic_n} =$	FOS Sliding: $FS_{sl.seismic_n} =$	Allowable Strength: $LTDS_{seismic_{Geogrid(n)}}$
21	14 $\cdot ft$	11.5 $\cdot ft$	1.44 $\cdot ft$	6.5	1.2	7.3	3030 $\cdot \frac{lb}{ft}$
18	12	10.5	1.73	4.5	1.5	4.74	3030
15	10	10.5	3.03	3.8	2.9	3.66	3030
12	8	10.5	4.32	3.3	4.5	3.02	3030
9	6	10.5	5.62	2.9	6.2	2.6	3030
6	4	10.5	6.91	2.6	7.9	2.29	3030
3	2	10.5	8.21	2.9	11.4	2.05	3030
1	0.67	10.5	9.07	3.3	15.8	1.92	3030

Pullout Capacity: $AC_n =$	Sliding Force: $SlidingForce_n =$	Sliding Capacity: $R'_{swdyn_n} =$
535 $\cdot \frac{lb}{ft}$	330 $\cdot \frac{lb}{ft}$	2411 $\cdot \frac{lb}{ft}$
980	747	3542
2300	1283	4694
4122	1939	5866
6446	2716	7058
9182	3612	8271
12160	4628	9505
14367	5371	10338

Tensile/ Connection Load: $F_{i_n} =$	Tensile Load w/Surcharge Influence $F_{icon_n} =$	Connection Capacity (peak): $T_{conn}(n) =$	$FOS_{Connection}$ w/surcharge influence: $FS_{con.seismic_n} =$
465 $\cdot \frac{lb}{ft}$	423 $\cdot \frac{lb}{ft}$	1027 $\cdot \frac{lb}{ft}$	2.43
671	620	1134	1.83
794	743	1241	1.67
917	866	1349	1.56
1040	989	1456	1.47
1163	1163	1563	1.34
1063	1063	1670	1.57
912	912	1742	1.91

$E_{lfacialinfl} = 4.44 \cdot ft$

$E_{dfacialinfl} = 4.44 \cdot ft$

Crest Toppling

$M_{r.dyn_{pp}} =$	$M_{o.dyn_{pp}} =$	$FS_{ct.seismic_{pp}} =$
40.66 $\cdot lb$	8.914 $\cdot lb$	4.56

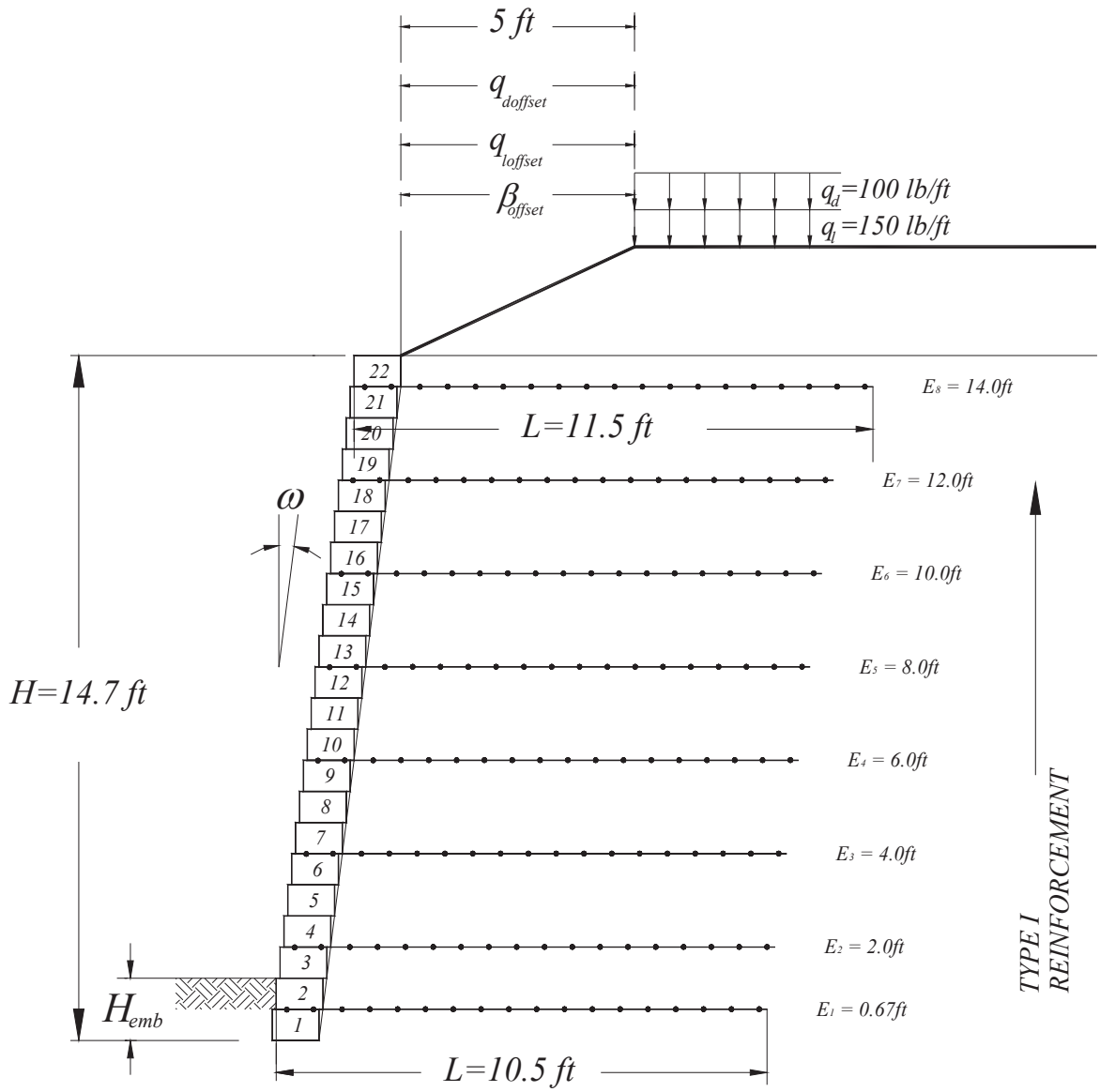
5 ft
$q_{doffset}$
$q_{loffset}$
β_{offset}
q_d=100 lb/ft
q_l=150 lb/ft
22
21
20
19
18
17
16
15
14
13
12
11
10
9
8
7
6
5
4
3
2
1
L=11.5 ft
ω
H=14.7 ft
H_{emb}
L=10.5 ft
E_8 = 14.0ft
E_7 = 12.0ft
E_6 = 10.0ft
E_5 = 8.0ft
E_4 = 6.0ft
E_3 = 4.0ft
E_2 = 2.0ft
E_1 = 0.67ft
TYPE I
REINFORCEMENT

INTERNAL COMPOUND STABILITY (ICS) STATIC ANALYSIS

The following calculation is based on the results of the critical failure determined with the SRWall v.4.0 software. The geometry of the following sample calculation is identical to the one determined by the software; however, because of the nature of the calculations, some of the results may not match exactly.

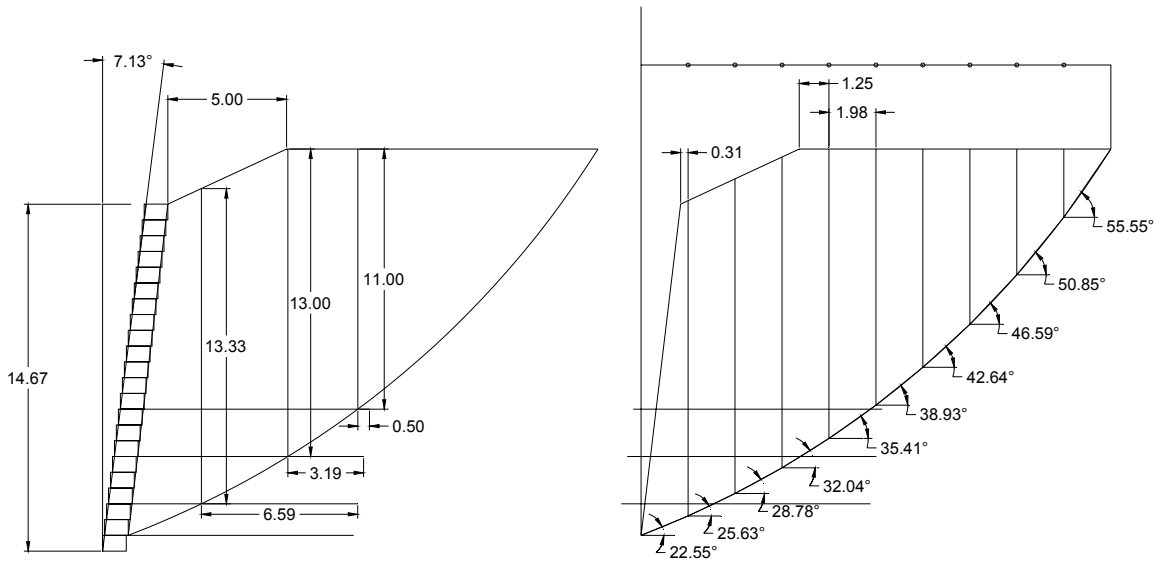

Number of slices: $Slices = 10$ $\qquad q_l = 150 \cdot \frac{lb}{ft^2}$ $\qquad q_d = 100 \cdot \frac{lb}{ft^2}$

The area and width of the slices as well as the angle that each slice makes with the horizontal is measured directly off the drawing above. In the case of an offset surcharge, only the width of the slice that is affected by the surcharge is determined.

$S =$

1
2
3
4
5
6
7
8
9
10

$$\alpha = \begin{pmatrix} 22.55 \\ 25.63 \\ 28.78 \\ 32.04 \\ 35.41 \\ 38.93 \\ 42.64 \\ 46.59 \\ 50.85 \\ 55.55 \end{pmatrix} \cdot deg \qquad AreaofSlice = \begin{pmatrix} 15.2544 \\ 26.3594 \\ 26.1706 \\ 25.3311 \\ 22.8362 \\ 19.8604 \\ 16.4733 \\ 12.5977 \\ 8.1198 \\ 2.8565 \end{pmatrix} \cdot ft^2 \qquad WidthofSlice = \begin{pmatrix} 0 \\ 0 \\ 1.98 \\ 1.98 \\ 1.98 \\ 1.98 \\ 1.98 \\ 1.98 \\ 1.98 \\ 1.98 \end{pmatrix} \cdot ft$$

$$WeightofSlice = AreaofSlice \cdot \gamma_i$$

$$WeightDeadLoad = WidthofSlice \cdot (q_d)$$

$$WeightLiveLoad = WidthofSlice \cdot (q_l)$$

(NCMA EQ 8-3)

$$m_\alpha = cos(\alpha) + \left[\frac{\left(sin(\alpha)\cdot tan\left(\phi_i\right)\right)}{FS}\right]$$

$$F_r = \frac{WeightofSlice + WeightLiveLoad + WeightDeadLoad}{m_\alpha}\cdot tan\left(\phi_i\right)$$

$$F_{s_S} = \left(WeightofSlice_S + WeightLiveLoad_S + WeightDeadLoad_S\right)\cdot sin(\alpha)_S$$

$AreaofSlice =$

15.25	$\cdot ft^2$
26.36	
26.17	
25.33	
22.84	
19.86	
16.47	
12.6	
8.12	
2.86	

$WeightofSlice =$

1831	$\cdot \frac{lb}{ft}$
3163	
3140	
3040	
2740	
2383	
1977	
1512	
974	
343	

$m_\alpha =$

1.091
1.091
1.087
1.08
1.068
1.053
1.032
1.005
0.971
0.926

$F_r =$

968	$\cdot \frac{lb}{ft}$
1674	
1931	
1890	
1748	
1578	
1383	
1153	
874	
522	

$F_s =$

702	$\cdot \frac{lb}{ft}$
1368	
1750	
1875	
1875	
1809	
1674	
1458	
1139	
691	

$\sum AreaofSlice = 175.86\cdot ft^2$ $\sum WeightofSlice = 21103\cdot\frac{lb}{ft}$ $\sum F_r = 13722\cdot\frac{lb}{ft}$ $\sum F_s = 14341\cdot\frac{lb}{ft}$

$WeightLiveLoad =$

0	$\cdot \frac{lb}{ft}$
0	
297	
297	
297	
297	
297	
297	
297	
297	

$WeightDeadLoad =$

0	$\cdot \frac{lb}{ft}$
0	
198	
198	
198	
198	
198	
198	
198	
198	

$WeightofSlice + WeightLiveLoad + WeightDeadLoad =$

1831	$\cdot \frac{lb}{ft}$
3163	
3635	
3535	
3235	
2878	
2472	
2007	
1469	
838	

$\sum WeightLiveLoad = 2376\cdot\frac{lb}{ft}$ $\sum (WeightDeadLoad) = 1584\cdot\frac{lb}{ft}$

$\sum (WeightofSlice + WeightLiveLoad + WeightDeadLoad) = 25063\cdot\frac{lb}{ft}$

Contribution of Reinforcement Element(s):

Number of reinforcement elements intersecting slip surface: $N_{grid} = 3$

Determine the Long-Term Design Strength, the overburden, the angle of the reinforcement with the horizontal and the anchorage length of the reinforcement from the drawing above.

$LTDS_1 = 1917.91 \frac{lb}{ft}$ $LTDS_2 = 1917.91 \frac{lb}{ft}$ $LTDS_3 = 1917.91 \frac{lb}{ft}$

$OverB_1 = 13.33ft$ $OverB_2 = 13.00ft$ $OverB_3 = 11ft$

$\alpha_{grid_1} = 25.63deg$ $\alpha_{grid_2} = 32.04deg$ $\alpha_{grid_3} = 35.41deg$

$L_{efp_1} = 6.59ft$ $L_{efp_2} = 3.19ft$ $L_{efp_3} = 0.50ft$

Normal load on grid intersected by the failure surface:

$Normal_{grid_{nn}} = \gamma_i \cdot OverB_{nn}$

$Normal_{grid_{nn}} =$

1600
1560
1320

$\cdot \frac{lb}{ft^2}$

Contribution of the grid reinfocement based on pullout:

$$T_{grid_{nn}} = \frac{2 \cdot C_i \cdot \left(Normal_{grid_{nn}} + q_d\right) \cdot tan\left(\phi_i\right) \cdot L_{efp_{nn}}}{1.5}$$

$T_{grid_{nn}} =$

6035
2853
383

$\cdot \frac{lb}{ft}$

The contribution of the reinforcement will be the lesser of the pullout capacity of the LTDS of the reinforcement.

$T_{grid_{nn}} =$

6035
2853
383

$\cdot \frac{lb}{ft}$

$\sum T_{grid} = 4218 \cdot \frac{lb}{ft}$

Contribution of grid reinforcement normal to the radius of the failure surface:

$F_{grid_{nn}} = T_{grid_{nn}} \cdot cos\left(\alpha_{grid_{nn}}\right)$

$F_{grid_{nn}} =$

1729
1626
312

$\cdot \frac{lb}{ft}$

$\sum F_{grid} = 3667 \cdot \frac{lb}{ft}$

Contribution of the facing:

Connection capacity

$T_{conn}(n) =$

1027	$\cdot \frac{lb}{ft}$
1134	
1241	
1349	
1456	
1563	
1670	
1742	

Shear Capacity

Block/Grid/Block Contribution

$a'_u = 1100 \cdot \frac{lb}{ft}$ $\lambda'_u = 35 \cdot deg$

$NV_{uBGB_{N-k+1}} =$

1154	$\cdot \frac{lb}{ft}$
0	
0	
1315	
0	
0	
1476	
0	
0	
1637	
0	
0	
1798	
0	
0	
1959	
0	
0	
2120	
0	
2227	
0	

Block/Block Contribution

$a_u = 1100 \cdot \frac{lb}{ft}$ $\lambda_u = 32 \cdot deg$

$NV_{uBB_{(N+1)-k}} =$

0	$\cdot \frac{lb}{ft}$
1196	
1244	
0	
1340	
1387	
0	
1483	
1531	
0	
1627	
1675	
0	
1771	
1819	
0	
1914	
1962	
0	
2058	
0	
2154	

If the failure surface intersects the face of the wall where a grid is present, the B/G/B shear capacity governs, otherwise the lesser of the B/B shear capacity or connection capacity distribution governs.

Results of Internal Compound Stability Anylysis:

$$\sum F_r = 13722 \cdot \frac{lb}{ft}$$

$$V_{uICS} = 2227 \cdot \frac{lb}{ft}$$

$$\sum F_s = 14341 \cdot \frac{lb}{ft}$$

$$\sum F_{grid} = 3667 \cdot \frac{lb}{ft}$$

$$\sum WeightofSlice = 21103 \cdot \frac{lb}{ft}$$

$$\sum (WeightofSlice + WeightLiveLoad + WeightDeadLoad) = 25063 \cdot \frac{lb}{ft}$$

$$\sum WeightLiveLoad = 2376 \cdot \frac{lb}{ft}$$

$$\sum (WeightDeadLoad) = 1584 \cdot \frac{lb}{ft}$$

$$FS_{ICS} = \frac{\sum F_r + \sum F_{grid} + V_{uICS}}{\sum F_s}$$

$$FS_{ICS} = 1.368$$

The following calculation is based on the results of the critical failure determined with the SRWall v.4.0 software. The geometry of the following sample calculation is identical to the one determined by the software; however, because of the nature of the calculations, some of the results may not match exactly.

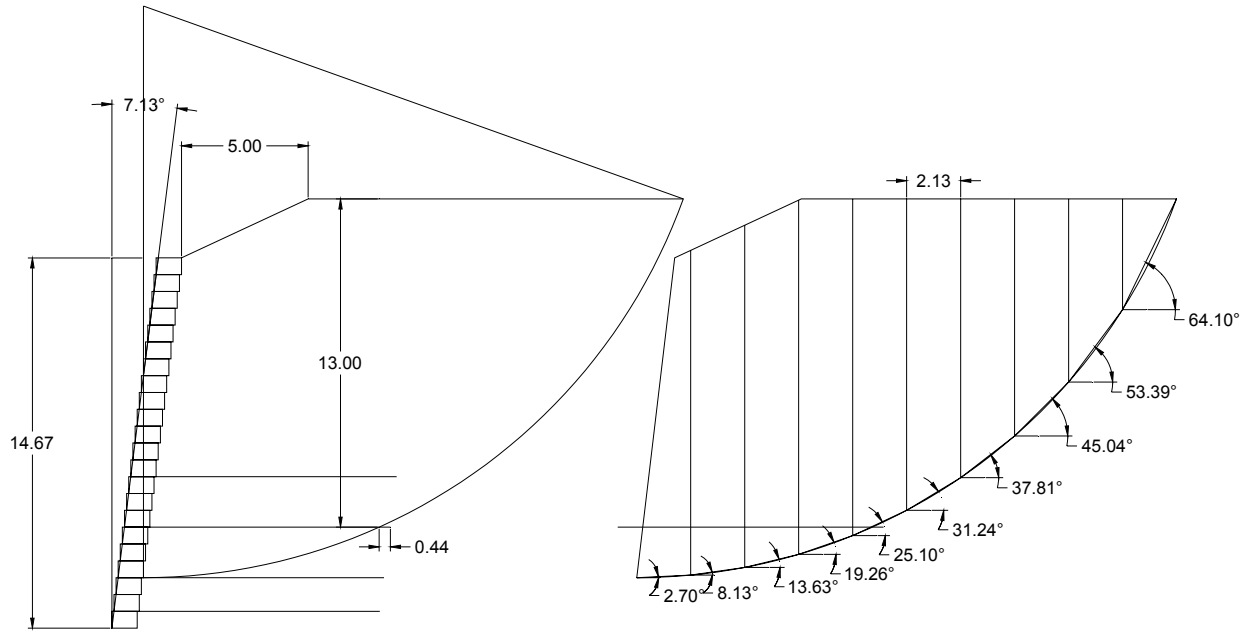

$R = 22.648ft$

$A = 0.2$ $\quad k_{h.ext} = 0.08$ $\quad q_d = 100 \cdot \frac{lb}{ft^2}$

Number of slices: $Slices = 10$

The area and width of the slices as well as the angle that each slice makes with the horizontal is measured directly off the drawing above. In the case of an offset surcharge, only the width of the slice that is affected by the surcharge is determined.

$S =$

1
2
3
4
5
6
7
8
9
10

$$\alpha = \begin{pmatrix} 2.70 \\ 8.13 \\ 13.63 \\ 19.26 \\ 25.10 \\ 31.24 \\ 37.81 \\ 45.04 \\ 53.39 \\ 64.10 \end{pmatrix} \cdot deg \qquad AreaofSlice = \begin{pmatrix} 17.4966 \\ 28.1692 \\ 29.4133 \\ 29.2290 \\ 27.3724 \\ 24.9291 \\ 21.7871 \\ 17.7471 \\ 12.4114 \\ 4.6718 \end{pmatrix} \cdot ft^2 \qquad WidthofSlice = \begin{pmatrix} 0 \\ 0 \\ 2.13 \\ 2.13 \\ 2.13 \\ 2.13 \\ 2.13 \\ 2.13 \\ 2.13 \\ 2.13 \end{pmatrix} \cdot ft$$

$$WeightofSlice = AreaofSlice \cdot \gamma_i$$

$$WeightDeadLoad = WidthofSlice \cdot (q_d)$$

$$WeightLiveLoad = WidthofSlice \cdot (q_l)$$

(NCMA EQ 8-3)

$$m_\alpha = cos(\alpha) + \left[\frac{(sin(\alpha) \cdot tan(\phi_i))}{FS}\right]$$

$$F_r = \frac{WeightofSlice + WeightLiveLoad + WeightDeadLoad}{m_\alpha} \cdot tan(\phi_i)$$

$$F_{s_S} = (WeightofSlice_S + WeightLiveLoad_S + WeightDeadLoad_S) \cdot sin(\alpha)_S$$

$AreaofSlice =$

17.5	$\cdot ft^2$
28.17	
29.41	
29.23	
27.37	
24.93	
21.79	
17.75	
12.41	
4.67	

$WeightofSlice =$

2100	$\cdot \frac{lb}{ft}$
3380	
3530	
3507	
3285	
2991	
2614	
2130	
1489	
561	

$m_\alpha =$

1.019
1.052
1.075
1.088
1.091
1.082
1.058
1.016
0.947
0.83

$F_r =$

1189	$\cdot \frac{lb}{ft}$
1855	
2010	
1974	
1851	
1710	
1543	
1331	
1037	
538	

$F_s =$

99	$\cdot \frac{lb}{ft}$
478	
882	
1227	
1484	
1662	
1733	
1658	
1367	
696	

$$\sum AreaofSlice = 213.23 \cdot ft^2 \qquad \sum WeightofSlice = 25587 \cdot \frac{lb}{ft} \qquad \sum F_r = 15038 \cdot \frac{lb}{ft} \qquad \sum F_s = 11285 \cdot \frac{lb}{ft}$$

$WeightLiveLoad =$

0	$\cdot \frac{lb}{ft}$
0	
0	
0	
0	
0	
0	
0	
0	
0	

$WeightDeadLoad =$

0	$\cdot \frac{lb}{ft}$
0	
213	
213	
213	
213	
213	
213	
213	
213	

$WeightofSlice + WeightLiveLoad + WeightDeadLoad =$

2100	$\cdot \frac{lb}{ft}$
3380	
3743	
3720	
3498	
3204	
2827	
2343	
1702	
774	

$$\sum WeightLiveLoad = 0 \cdot \frac{lb}{ft} \qquad \sum (WeightDeadLoad) = 1704 \cdot \frac{lb}{ft}$$

$$\sum (WeightofSlice + WeightLiveLoad + WeightDeadLoad) = 27291 \cdot \frac{lb}{ft}$$

Contribution of Reinforcement Element(s):

Number of reinforcement elements intersecting slip surface: $N_{grid} = 1$

Determine the Long-Term Design Strength, the overburden, the angle of the reinforcement with the horizontal and the anchorage length of the reinforcement from the drawing above.

$LTDS_{seis_1} = LTDS_1 \cdot RF_{cr}$

$OverB_1 = 13ft$

$\alpha_{grid_1} = 25.10deg$

$L_{efp_1} = 0.44ft$

Normal load on grid intersected by the failure surface:

$Normal_{grid_{nn}} = \gamma_i \cdot OverB_{nn}$

$Normal_{grid_{nn}} = \boxed{1560} \cdot \frac{lb}{ft^2}$

Contribution of the grid reinfocement based on pullout:

$$T_{gridseis_{nn}} = \frac{2 \cdot C_i \cdot \left(Normal_{grid_{nn}}\right) \cdot tan\left(\phi_i\right) \cdot L_{efp_{nn}}}{1.5}$$

$T_{gridseis_{nn}} = \boxed{370} \cdot \frac{lb}{ft}$

The contribution of the reinforcement will be the lesser of the pullout capacity of the *LTDS* of the reinforcement.

$T_{gridseis_{nn}} = \boxed{370} \cdot \frac{lb}{ft}$

$\sum T_{gridseis} = 370 \cdot \frac{lb}{ft}$

Contribution of grid reinforcement normal to the radius of the failure surface:

$F_{gridseis_{nn}} = T_{gridseis_{nn}} \cdot cos\left(\alpha_{grid_{nn}}\right)$

$F_{gridseis_{nn}} = \boxed{335} \cdot \frac{lb}{ft}$

$\sum F_{gridseis} = 335 \cdot \frac{lb}{ft}$

Contribution of the facing:

Connection capacity
Shear Capacity

$T_{conn}(n) =$

1027	$\cdot \frac{lb}{ft}$
1134	
1241	
1349	
1456	
1563	
1670	
1742	

Block/Grid/Block Contribution

$a'_u = 1100 \cdot \frac{lb}{ft}$ $\lambda'_u = 35 \cdot deg$

$NV_{uBGB_{N-k+1}} =$

1154	$\cdot \frac{lb}{ft}$
0	
0	
1315	
0	
0	
1476	
0	
0	
1637	
0	
0	
1798	
0	
0	
1959	
0	
0	
2120	
0	
2227	
0	

Block/Block Contribution

$a_u = 1100 \cdot \frac{lb}{ft}$ $\lambda_u = 32 \cdot deg$

$NV_{uBB_{(N+1)-k}} =$

0	$\cdot \frac{lb}{ft}$
1196	
1244	
0	
1340	
1387	
0	
1483	
1531	
0	
1627	
1675	
0	
1771	
1819	
0	
1914	
1962	
0	
2058	
0	
2154	

$DynF_S = WeightofSlice_S \cdot k_{h.ext}$

$WeightofSlice =$

2100
3380
3530
3507
3285
2991
2614
2130
1489
561

$\cdot \frac{lb}{ft}$

$DynF =$

158
254
265
264
247
225
197
160
112
42

$\cdot \frac{lb}{ft}$

$$\sum DynF = 1924 \cdot \frac{lb}{ft}$$

Results of Internal Compound Stability Anylysis:

$$\sum F_r = 15038 \cdot \frac{lb}{ft}$$

$$V_{uICS} = 2120 \cdot \frac{lb}{ft}$$

$$\sum F_s = 11285 \cdot \frac{lb}{ft}$$

$$\sum F_{gridseis} = 334.95 \cdot \frac{lb}{ft}$$

$$\sum WeightofSlice = 25587 \cdot \frac{lb}{ft}$$

$$\sum (WeightofSlice + WeightLiveLoad + WeightDeadLoad) = 27291.24 \cdot \frac{lb}{ft}$$

$$\sum WeightLiveLoad = 0 \cdot \frac{lb}{ft}$$

$$\sum (WeightDeadLoad) = 1704 \cdot \frac{lb}{ft}$$

$$\sum DynF = 1924 \cdot \frac{lb}{ft}$$

$$FS_{ICSdyn} = \frac{\sum F_r + \sum F_{gridseis} + V_{uICS}}{\sum F_s + \sum DynF} \qquad FS_{ICSdyn} = 1.324$$

APPENDIX C
DETERMINATION OF LONG-TERM DESIGN STRENGTH, LTDS OF GEOSYNTHETIC SOIL REINFORCEMENT

C.1: Background

Geosynthetic reinforcement systems consist of geogrid or geotextile materials arranged in horizontal planes in the backfill to resist outward movement of the reinforced soil mass. Geosynthetic design strength must be determined by testing and analysis methods that account for the long-term dimensional stability and durability of the full geosynthetic structure. Dimensional stability is characterized by the ability of the geosynthetic structure to sustain long-term loads in service without excessive creep strains or creep rupture. Durability factors include site damage, chemical degradation and biological degradation and creep.

C.2: Long-Term Design Strength

Long-Term Design Strength (*LTDS*) of the geosynthetic shall be determined using a reduction factor approach to account for creep rupture strength and degradation mechanisms of the reinforcement.

For reinforced SRW's, the long-term design strength of the geosynthetic *LTDS* is:

$$LTDS = \frac{T_{ult}}{RF_D \text{ x } RF_{ID} \text{ x } RF_{CR}}$$

where:

T_{ult} = Ultimate (or yield tensile strength) from single or multi-rib tensile strength test (ASTM D 6637 [Ref. 85]) for geogrids or wide width tensile strength test (ASTM D 4595 [Ref. 81]) for geotextiles, based on minimum average roll value (MARV) for the product.

RF_D = Durability reduction factor is dependent on the susceptibility of the geosynthetic to attack by microorganisms, chemicals, thermal oxidation, hydrolysis and stress cracking. The typical range is from 1.1 to 2.0. The minimum reduction factor shall be 1.1.

RF_{ID} = Installation damage reduction factor can range from 1.05 to 3.0, depending on backfill gradation and product mass per unit weight. The minimum reduction factor shall be 1.05 to account for testing uncertainties.

RF_{CR} = Creep reduction factor is the ratio of the ultimate strength (T_{ult}) to the creep limit strength obtained from laboratory creep tests for each product, and can vary typically from1.5 to 5.0.

C.2.a: Ultimate Tensile Strength

Ultimate tensile strength (T_{ult}) values shall be based upon Minimum Average Roll Values (MARV), per ASTM D 4759 [Ref. 111], and determined in accordance with ASTM D 6637 [Ref. 85] for geogrids and ASTM D 4595 [Ref. 81] for geotextiles.

C.2.b: Creep

Long-term tension-strain-time behavior of polymeric reinforcement shall be determined from results of controlled laboratory creep tests. Current state of practice indicates that creep is evaluated using creep rupture approaches. ASTM D 5262 [Ref. 82] outlines test methods for 'conventinal' creep rupture testing under standard laboratory conditions and raised temperature conditions using Time-Temperature Superposition method (TTS). Additionally,

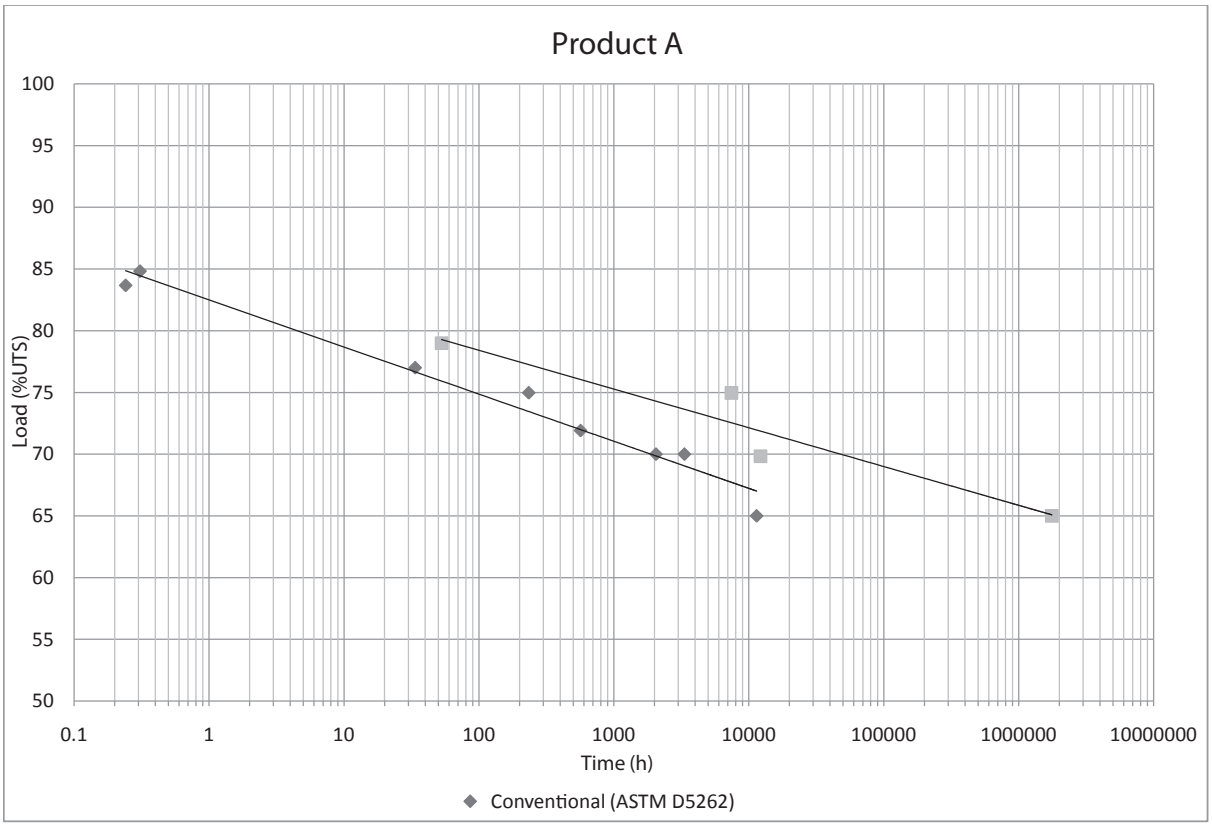

Figure C-1: Comparison of Conventional and Creep Rupture Data—Geosynthetic Product A

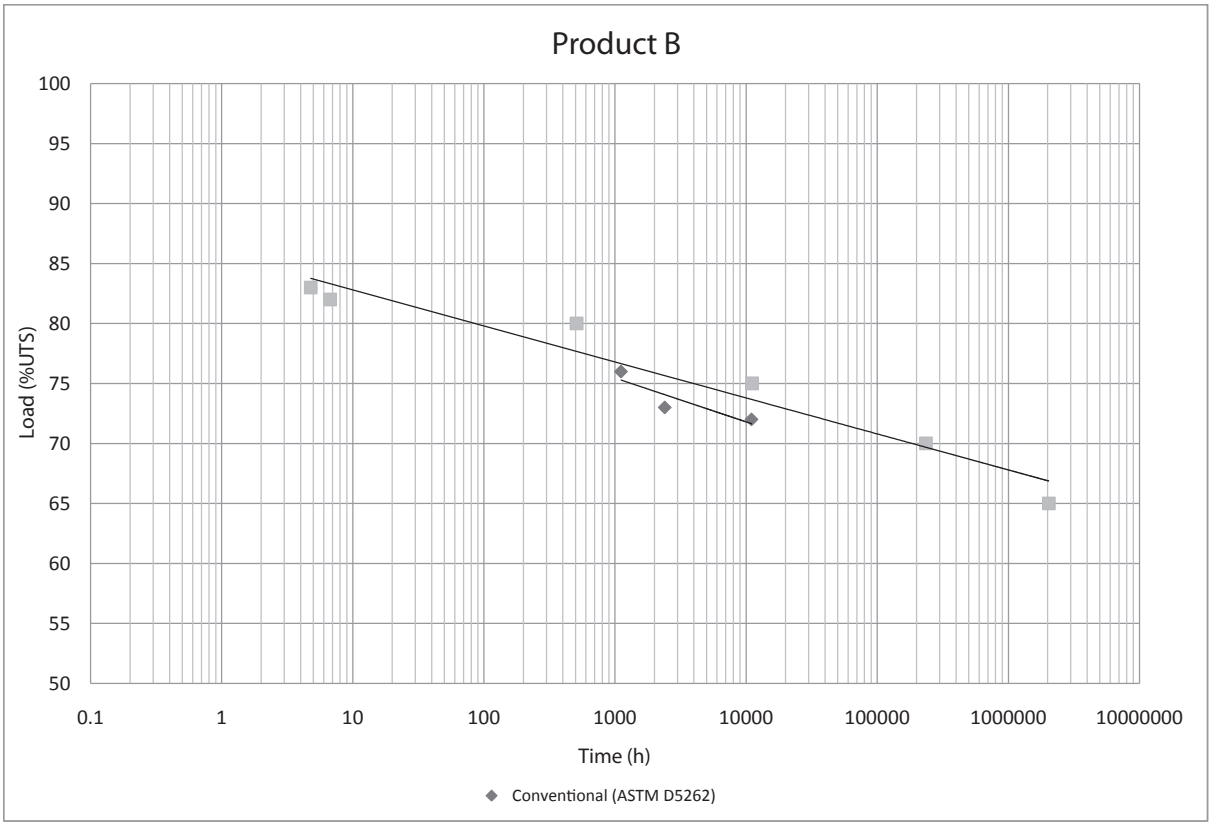

Figure C-2: Comparison of Conventional and Creep Rupture Data—Geosynthetic Product B

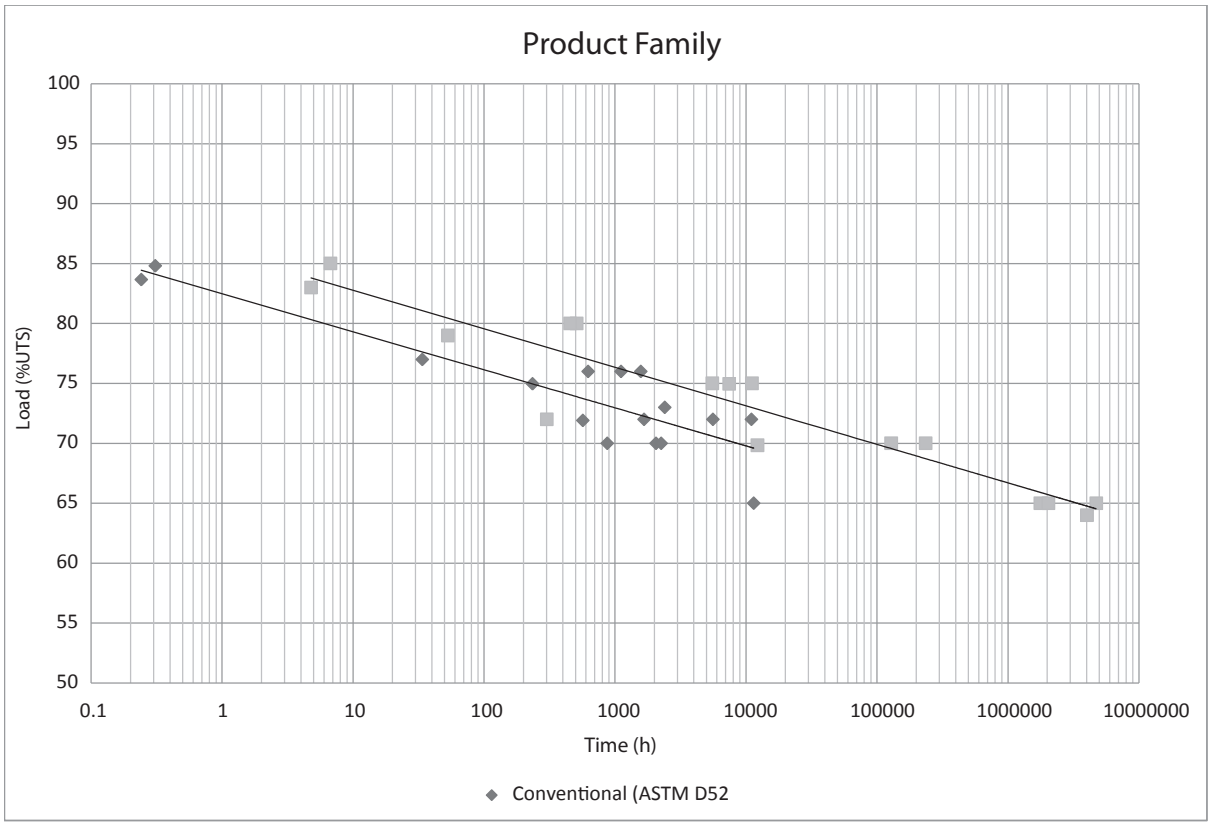

Figure C-3: Comparison of Conventional and Creep Rupture Data for Similar Products within a Product Family

creep rupture may be evaluated using ASTM D6992 [Ref. 110] Creep Rupture using Stepped-Isothermal Method (SIM). SIM provides an accelerated means of defining the creep rupture behavior of polymer geosynthetics. Where SIM is utilized to define the creep rupture behavior of the geosynthetic, the data should be verified with conventional creep rupture data. At a minimum, conventional creep rupture data shall include 1,000-hr and 10,000-hr rupture times at room temperature (20°C). The time to rupture using conventional creep should be similar to the time to rupture predicted using SIM. The data from SIM and conventional rupture may be combined to develop the creep rupture envelope for a product or product line. Figures C-3 and C-4 illustrate the progression taken to evaluate conventional and SIM creep rupture data to develop a creep rupture envelope for a product family.

The creep reduction factor (RF_{CR}) is the ratio of the ultimate strength (T_{ult}) to the extrapolated maximum sustainable load (i.e., creep rupture limit) within the design life of the structure.

Figure C-5 illustrates the two critical stages of creep behavior in polymers as well as the wide variation in accumulated strain from tests conducted at six different load levels for the same geosynthetic reinforcement. The excessive strain generated by load levels T_4, T_5 and T_6 indicate transition to the "tertiary" creep stage and onset of creep rupture. Load levels T_1, T_2 and T_3 clearly show the "secondary" stage of creep with very low strain rates (i.e. flat curves showing decreasing strain with log of time). The RF_{CR} ensures that the reinforcement remains in the "secondary" stage of creep, and creep rupture is avoided, throughout the design life of the reinforced structure.

Creep test data at a given temperature may be directly extrapolated out over time up to one order of magnitude, in accordance with standard polymeric practices. Accelerated testing is required to extrapolate 10,000 hour creep test data to a minimum 75 year design life. Accelerated testing is used to extrapolate to a 75 year design life and to ensure the failure mechanism, i.e., ductile to brittle transition, is defined. Conventional Creep Rupture and SIM Creep Rupture may be used to effectively define the creep behavior of a geosynthetic for 75 to 100 design life.

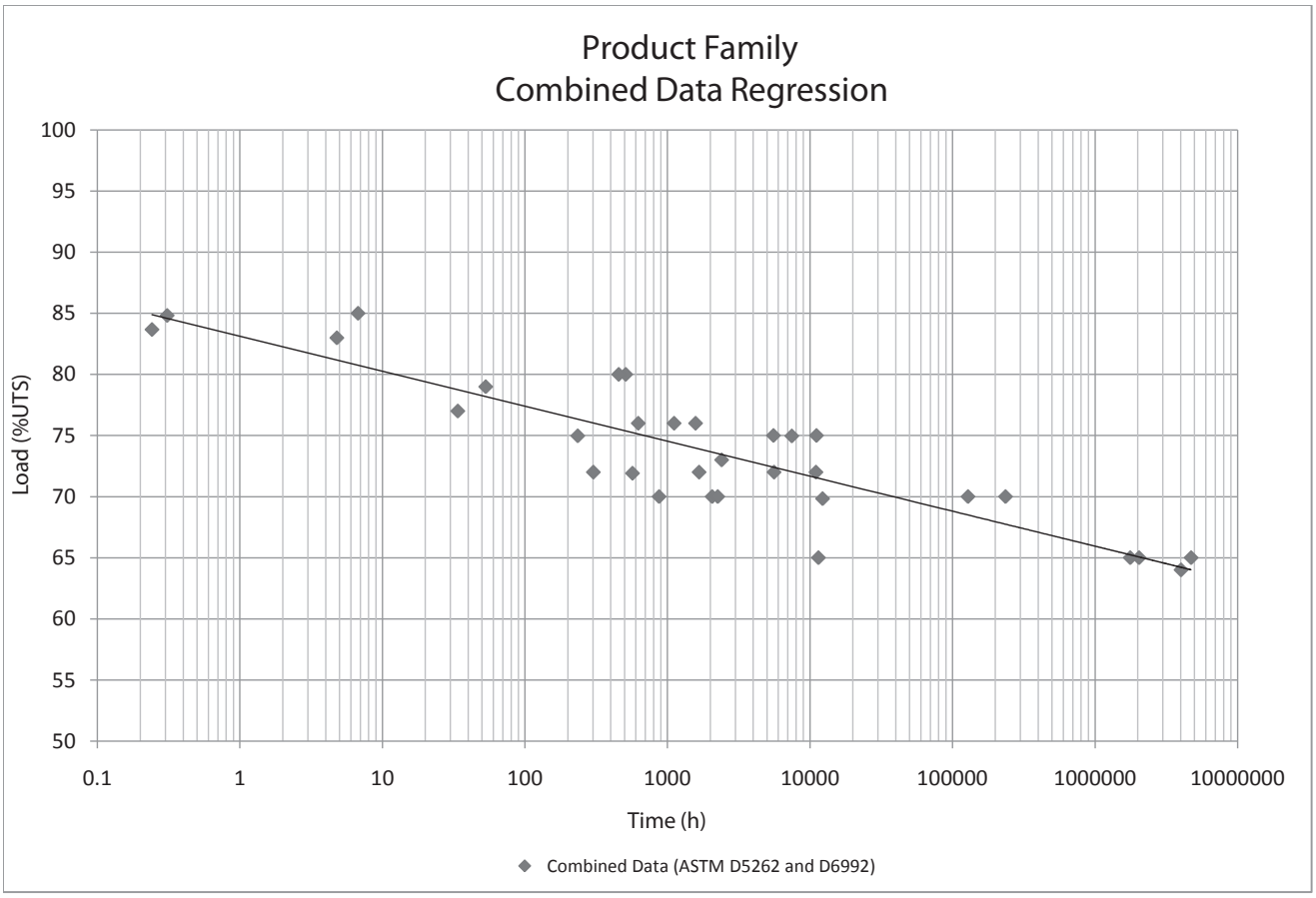

Figure C-4: Illustration of Combined Conventional and SIM Creep Rupture Data for a Product Family

The requirement for a 10,000 hour minimum creep test period for geogrids and geotextiles may be waived for a new product if it can be demonstrated that it is sufficiently similar to a proven 10,000 hour creep tested product of a similar nature. Product similarity must consider base resin, resin additives, product manufacturing process, product geometry, and creep response. When these conditions are met, creep testing shall be conducted for a minimum of 1,000 hours. The 1,000 hour conventional creep curves shall pattern very closely to the 1,000 hour portion of the 10,000 hour creep curves of the similar product. Alternatively, SIM creep rupture to a minimum of 3 rupture times, including 1,000 hour, may be used to verify new products. The SIM creep rupture regression line for the similar product line should predict similar creep rupture performance over the design life of the product.

C.2.c: Construction Installation Damage

The effect of construction damage on the reinforcement shall be determined from the results of full-scale construction damage tests. The effect of construction damage tests shall be incorporated into the installation damage reduction factor RF_{ID}, which is applied in determining an allowable reinforcement tension. Values must be substantiated by construction damage tests (ASTM D 5818 [Ref. 84]) for the selected or family of geosynthetic materials with project specific, representative, or a more severe backfill source. The behavior of the geosynthetic in backfill materials differing from the test material may be predicted by correlating the installation damage factor to the D_{50} of the backfill materials. The behavior of similar products within a geosynthetic family may be predicted by correlating the installation damage factor to product weight, or utilizing factors determined from similar, but lighter weight, products of the same family. In no case shall an installation damage reduction factor, RF_{id}, less than 1.05 be used. The reduction factor considered in design must be justified by testing conducted with similar or more severe soils, and similar or more severe construction placement techniques.

C.2.d: Durability

The effect of chemical and biological durability should be evaluated for the geosynthetic reinforcement. Research indicates that biological degradation in typical, natural soils as recommended in this manual is very unlikely for geosynthetic made with quality polymer materials (polyester, polypropylene, polyethylene, PVA, fiberglass). Chemical degradation can occur under certain environmental exposures and is dependent upon the base polymer material of the geosynthetic.

The recommended range of acceptable soil fill pH is 3 to 9. Soils with pH > 12 or pH < 3 should not be used without specific supporting test data. This recommendation does differentiate between specific chemical constituents that can create extreme pH environments.

The durability reduction factor, RF_D, may vary from as low as 1.1 to over 2.0 depending on the aggressiveness of the soil environment and the characteristics or polymer type of the geosynthetic. In no case should a durability reduction factor, RF_D, less than 1.1 be used.

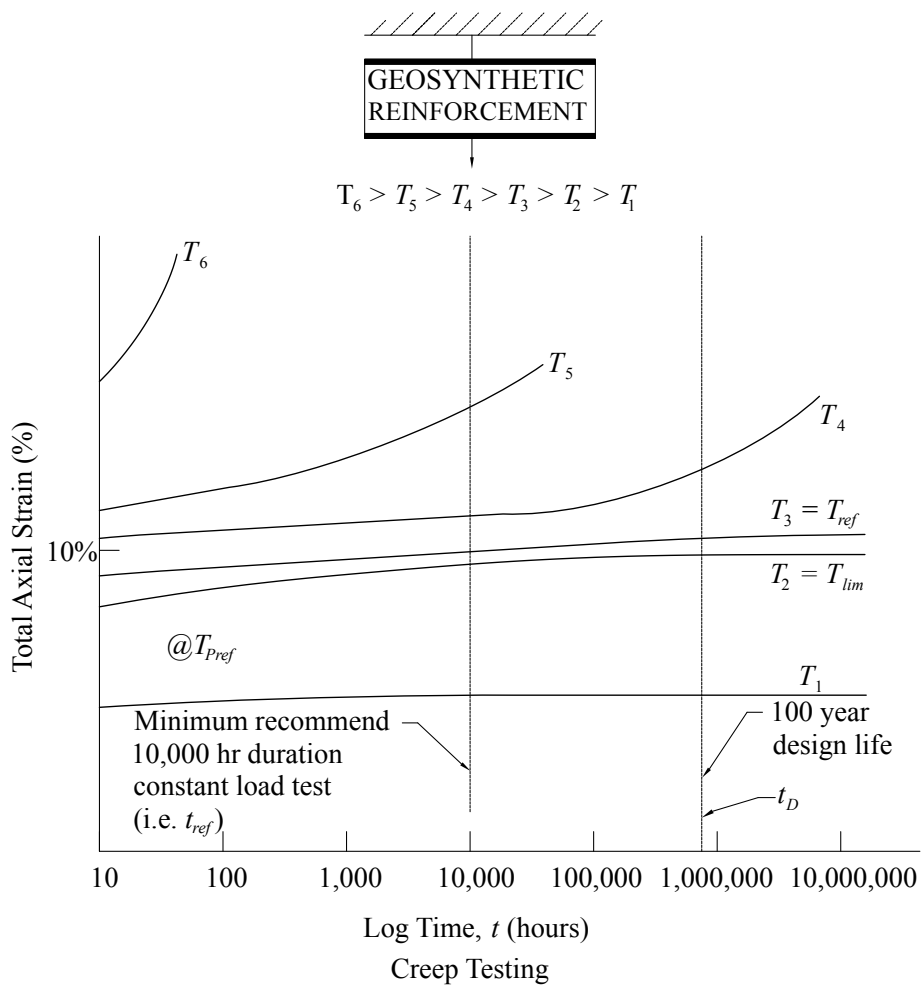

Figure C-5: Load-Strain-Time data for Geosynthetic Reinforcement

C.2.e: Default Reduction Factors

For SRW applications that are defined as not having severe consequences should poor performance or failure occur, and have non-aggressive soil conditions, plus the geosynthetic meets the minimum requirements in Table C-1, the long term design strength of the reinforcement may be determined using a default reduction factor for $RF = 10$ (where $RF = RF_{CR} \times RF_{ID} \times RF_{D}$).

Table C-1: Minimum Requirements for Geosynthetic Products to Allow Use of Default Reduction Factor for Long-Term Degradation

Polymer Type	Property	Test Method	Criteria to Allow Use of Default *RF**
Polypropylene	UV Resistance	ASTM D 4355	Min. 70% strength retained after 500 hrs in weatherometer
Polyethylene	UV Resistance	ASTM D 4355	Min. 70% strength retained after 500 hrs in weatherometer
Polyester	Hydrolysis Resistance	Intrinsic Viscosity Method (ASTM D 4603) with Correlation, or Determine Directly Using Gel Permeation Chromatography	Min. number average Molecular weight of 25,000
Polyester	Hydrolysis Resistance	ASTM D 2455	Max. of Carboxyl End Group Content of 30
All Polymers	Survivability	Weight per unit area (ASTM D 5261)	Min. 270 g/m^2
All Polymers	% Post-Consumer Recycled Material by Weight	Certification of Materials Used	Maximum of 0%

CONVERSION TABLE

INCH-POUND	TO	METRIC	
1 inch (in.)	=	25.4	millimeters (mm)
1 foot (ft)	=	0.3048	meters (m)
1 yard (yd)	=	0.9144	meters (yd)
1 square foot (ft^2)	=	0.0929	square meters (m^2)
1 square yard (yd^2)	=	0.8361	square meters (m^2)
1 ounce (oz)	=	28.35	grams (gm)
1 pound (lb)	=	0.4536	kilogram (kg)
1 pound (force) (lbs)	=	4.448	newtons (N)
1 pound/foott (lbs/ft)	=	0.0146	kilonewtons/meter (kN/m)
1 pound/inch (lbs/in.)	=	0.1751	kilonewtons/meter (kN/m)
1 pound/sq. inch (psi)	=	6.895	kilopascal (kPa)
1 pound/sq. foot (psf)	=	0.0479	kilopascal (kPa)
1 pound/cu. foot (pcf)	=	0.1571	kilonewtons/cubic meter (kN/m^3)

METRIC	TO	INCH-POUND	
1 millimeter (mm)	=	0.03937	inches (in)
1 meter (m)	=	39.37	inches (in)
1 meter (m)	=	3.281	feet (ft)
1 square meter (m^2)	=	10.76	sq. feet (ft^2)
1 square meter (m^2)	=	1.196	sq. yards (yd^2)
1 gram (gm)	=	0.0353	ounces (oz)
1 kilogram (kg)	=	2.205	pounds (lb)
1 newton (N) (1 kg, force)	=	0.2248	pounds force (lb)
1 kilonewton/meter (kN/m)	=	68.5	pounds/foot (lbs/ft)
1 kilonewton/meter (kN/m)	=	5.71	pounds/inch (lbs/in)
1 kilopascal (kPa)	=	0.145	pounds/sq. inch (psi)
1 kilopascal (kPa)	=	20.87	pounds/sq. foot (psf)
1 kilonewton/cubic meter (kN/m^3)	=	6.365	pounds/cu. foot (pcf)

NOTATIONS & ABBREVIATIONS

<u>Note</u>: the (*n*) notation refers to reinforcement layers and the (*z*) notation refers to concrete unit depth from the top of wall.

A = horizontal peak ground acceleration (ft/s^2)

AC_n = anchorage capacity for n^{th} reinforcement layer (lb/ft)

AOS = apparent opening size of the geotextile

$A_{c(n)}$ = contributory area for tensile load in n^{th} layer of reinforcement (ft), actually ft^2, but unit width understood

A_f = area of flow ft^2 (m^2)

a_{cs} = apparent minimum ultimate connection strength between geosynthetic reinforcement and segmental units (lb/ft)

a_{cs1} = apparent minimum ultimate connection between geosynthetic reinforcement and segmental units for the first line on a bilinear connection curve (lb/ft)

a_{cs2} = apparent minimum ultimate connection between geosynthetic reinforcement and segmental units for the second line on a bilinear connection curve (lb/ft)

a_u = apparent minimum ultimate shear capacity between segmental units (lb/ft)

B = equivalent footing width of eccentrically loaded foundation base of soil reinforced SRWs (ft)

B_c = equivalent footing width for eccentrically loaded gravity SRWs (ft)

B'_c = equivalent footing width for eccentrically loaded gravity SRWs on seismic conditions (ft)

$B_{seismic}$ = equivalent footing width of eccentrically loaded foundation base of soil reinforced SRWs on seismic conditions (ft)

C_{ds} = coefficient of direct sliding

C_i = coefficient of interaction for pullout

c = cohesion of soil (psf)

c_f = cohesion of foundation soil (psf)

D_n = depth to mid-point of contributory area of $A_{c(n)}$ of nth reinforcement layer (ft)

d_{int} = horizontal distance from the back of the wall to the intersection of the slope and the internal failure plane (ft)

d_n = average depth of overburden of nth layer of reinforcement over the anchorage length, $L_{a(n)}$ (ft)

$d_{seismic}$ = design lateral deflection during seismic event (in.)

E_{qdinfl} = elevation of the influence of dead load based on 2V:1H influence line (ft)

E_{qlinfl} = elevation of the influence of live load based on 2V:1H influence line (ft)

$E_{(n)}$ = elevation of nth reinforcement layer above base of wall (ft)

e = eccentricity of resultant vertical bearing force (ft)

e_c = eccentricity of resultant vertical bearing force, conventional walls (ft)

e_r = eccentricity of self-weight of reinforced zone plus surcharge (ft)

e_w = eccentricity of column of SRW (ft)

FE = material factor for creep extrapolation

FS_{bc} = factor of safety, bearing capacity

FS_{cs} = factor of safety, connection strength

FS_{gl} = factor of safety, global stability

FS_{ot} = factor of safety, overturning

FS_{po} = factor of safety, pullout

FS_{sc} = factor of safety, shear capacity

FS_{sl} = factor of safety, sliding

FS_{to} = factor of safety, tensile overstress

$F_{g(n)}$ = force in n^{th} geosynthetic reinforcement layer (lb/ft)

G_u = horizontal center of gravity of segmental unit (ft), vertical center of gravity assumed at $H_u/2$

g = gravitational constant lb ft/s^2 (kg m/s^2)

H = total height of wall (ft)

H' = exposed height of wall (ft)

H_1 = exposed height of the lower wall (ft)

H_2 = exposed height of the upper wall (ft)

H_{cu} = cap/coping height for segmental unit (ft)

H_{emb} = total wall embedment (ft)

H_{ext} = height of back of reinforced wall over which the active earth pressure for external stability is calculated (ft)

H_l = lower wall height (ft)

H_u = segmental unit height (ft)

h = increase in height due to backslope at the end of the reinforced zone (ft)

$h_{inflmax}$ = theoretical maximum height of backslope based on 2V:1H influence line (ft)

h_{int} = height above the reinforced mass at the intersection of a continuous slope or broken back slope and the internal failure surface (ft)

h_{IR} = height from toe of wall to line of action of inertial force P_{IR} (ft)

h_{max} = increase in height due to backslope at distance of $L_\beta + (H+h)$ (ft)

h_{maxint} = maximum height due to backslope at distance of $2H$ (ft)

h_s = increase in height due to backslope at the end of the reinforced zone in broken back geometry (ft)

I = revised slope angle (deg)

i = hydraulic gradient (ft/ft)

K_a = active earth pressure coefficient

K_{aE} = dynamic earth pressure coefficient

K_{aEcon} = dynamic earth pressure coefficient for conventional retaining walls

K_{aEH} = horizontal component of the dynamic earth pressure coefficient

K_{aEV} = vertical component of the dynamic earth pressure coefficient

K_{aext} = active earth pressure coefficient for external calculations

K_{aint} = active earth pressure coefficient for internal calculations

k = permeability of aggregate (ft/ft)

$k_{geotextile}$ = normal permeability of geotextile (ft/sec)

k_h = horizontal seismic coefficient

k_{hint} = value of k_h used for internal and facing stability calculations

k_{hext} = value of k_h used for external calculations

k_{soil} = soil permeability (ft/sec)

k_v = vertical seismic coefficient

L = minimum base width (ft)

$LTDS$ = long-term design strength (lb/ft)

$L_{a(n)}$ = anchorage length for n^{th} reinforcement layer (ft)

L_e = length of reinforcement in anchorage zone during pullout test (ft)

L_s = length of reinforcement at base of internal sliding wedge (ft)

L_u = segmental unit length (ft)

L' = width of reinforced zone (ft)

L'' = increase in width due to backslope angle β (ft)

L'_s = width of reinforced for internal sliding on the nth reinforcement layer (ft)

L_β = horizontal width of reinforced zone at intersection with backslope, β (ft)

$L_{\beta q}$ = distance over which dead load is applied in broken back geometry (ft)

MSE = Mechanically Stabilized Earth

M_o = overturning moment (ft-lb/ft)

M_r = resisting moment (ft-lb/ft)

N = number of reinforcement layers in design

N_e, N_q, N_γ = bearing capacity factors

N_{min} = minimum number of reinforcement layers

P_a = total active earth force (lb/ft)

P_{aE} = total dynamic active earth force (lb/ft)

P_{aEH} = horizontal component of P_{aE} (lb/ft)

P_{aEV} = vertical component of P_{aE} (lb/ft)

P_{aH} = horizontal component of active earth force (lb/ft)

$P_{aH(n)}$ = total horizontal active earth force acting at (H_{ext} - $E_{(n)}$) (lb/ft)

$P_{a(n)}$ = active earth force acting at (H_{ext} - $E_{(n)}$) (lb/ft)

P_{aV} = vertical component of active earth force (lb/ft)

$P_{aV(n)}$ = total vertical active earth force acting at (H_{ext} - $E_{(n)}$) (lb/ft)

P_{IR} = horizontal inertial force due to the reinforced soil mass used in external stability calculations (lb/ft)

P_q = resultant force due to active earth pressure from uniform surcharge, $q_i + q_d$ (lb/ft)

P_{qdH} = resultant horizontal force due to active earth pressure from uniform dead load surcharge (lb/ft)

$P_{qdH(n)}$ = horizontal component of P_{qd} acting at (H_{ext} - $E_{(n)}$) (lb/ft)

P_{qdV} = resultant vertical force due to active earth pressure from uniform dead load surcharge (lb/ft)

$P_{qdV(n)}$ = vertical component of P_{qd} acting at (H_{ext} - $E_{(n)}$) (lb/ft)

P_{qlH} = resultant horizontal force due to active earth pressure from uniform live load surcharge (lb/ft)

$P_{qlH(n)}$ = horizontal component of P_{ql} acting at (H_{ext} - $E_{(n)}$) (lb/ft)

P_{qlV} = resultant vertical force due to active earth pressure from uniform live load surcharge, (lb/ft)

$P_{qlV(n)}$ = vertical component of P_{ql} acting at (H_{ext} - $E_{(n)}$) (lb/ft)

P_s = resultant force due to active earth pressure from soil self-weight (lb/ft)

P_{sH} = resultant horizontal force due to active earth pressure from soil self-weight (lb/ft)

$P_{sH(n)}$ = horizontal component of P_s acting at (H_{ext} - $E_{(n)}$) (lb/ft)

P_{sV} = resultant vertical force due to active earth pressure from soil self-weight (lb/ft)

$P_{sV(n)}$ = vertical component of P_s acting at (H_{ext} - $E_{(n)}$) (lb/ft)

P'_{aH} = total horizontal force due to active earth pressure for internal calculations (lb/ft)

P'_{qH} = resultant horizontal force due to active earth pressure from uniform surcharge ($q_l + q_d$) for internal calculations (lb/ft)

P'_{sH} = resultant horizontal force due to active earth pressure from soil self-weight for internal calculations (lb/ft)

Q_a = applied bearing stress (psf)

Q_{ult} = ultimate bearing capacity of foundation soils (psf)

$q_{doffset}$ = horizontal distance from the back of the top block to the beginning of a uniform dead load surcharge (ft)

q_f = flow capacity (ft^3/sec)

q_l or q_d = uniform surcharge loading at top of wall (psf) (live or dead)

$q_{loffset}$ = horizontal distance from the back of the top block to the beginning of a uniform live load surcharge (ft)

R = radius of potential slip circle in slope stability analysis (ft)

R_b = resultant vertical bearing force (lb/ft)

R_{ds} = maximum resistance in direct shear test (lb/ft)

R_{po} = maximum resistance in pullout test (lb/ft)

R_s = base sliding resistance (lb/ft)

$R_{s(w)}$ = sliding resistance at base of soil reinforced SRW (lb/ft)

RF_{CR} = creep reduction factor

RF_D = durability reduction factor

RF_{ID} = installation damage reduction factor

$R'_{s(n)}$ = sum of the resistance of all reinforcement layers above the nth layer (lb/ft)

$R'_{s(w)}$ = base sliding resistance for internal sliding wedge (lb/ft)

RS_W = sliding resistance at base of SRW units (lbs/ft)

SRW = segmental retaining wall

T_{conn} = connection strength between geosynthetic reinforcement and segmental units (lb/ft)

$T_{connMAX}$ = ultimate maximum connection strength between geosynthetic reinforcement and segmental units (lb/ft)

T_{index} = index tensile strength (lb/ft)

T_{lim} = limit state or limiting tensile strength (lb/ft)

T_{ult} = ultimate tensile strength from wide width tensile strength test (lb/ft)

t = time (hr)

t_d = time limit for design, i.e., design life (hr)

tr = the number of different reinforcement types in design

t_{ref} = reference time of known creep performance of reinforcement (hr)

u = porewater pressure (psf)

V_u = shear capacity between segmental units (lb/ft)

$V_{u(max)}$ = peak interface shear capacity between SRW units (lb/ft)

$V_{u(n)}$ = shear capacity between segmental units at reinforcement n (lb/ft)

W_r = weight of the reinforced zone (lb/ft)

$W_{r\beta}$ = weight of slope above the reinforced zone (lb/ft)

$W_{r\beta 1,2,3}$ = components of weight of slope above the reinforced zone in broken back geometry (lb/ft)

W_u = segmental unit width (ft)

W_W = weight of the column of segmental retaining wall units (lb/ft)

W'_i = reduced weight of reinforced zone extending from the back of the facing column to length $0.5H$ beyond the face of the wall and having constant height H used to calculate the inertial force P_{IR} (lb/ft)

$W'_{ri(n)}$ = weight of soil on reinforcement layer n

$W'_{r\beta(n)}$ = weight of slope above the reinforced zone at reinforcement layer N (lb/ft)

W'_u = weight of SRW unit including aggregate fill (lb/ft)

W'_β = reduced weight of the wedge of soil in the slope above the crest of the wall at height H used to calculate the inertial force P_{IR} (lb/ft)

w = placement moisture content (%)

w_{opt} = optimum moisture content (%)

X_q = moment arm for P_{qV} (ft)

$X_{q\beta}$ = moment arm for $q_d L_\beta$

X_{ri} = moment arm for W_{ri} (ft)

$X_{r\beta}$ = moment arm for $W_{r\beta}$ (ft)

$X_{r\beta 1,2,3}$ = moment arms for $W_{r\beta 1,2,3}$ (ft)

X_s = moment arm for P_{sV} (ft)

X_W = moment arm for W_W (ft)

Y_q = moment arm for P_{qH} (ft)

Y_s = moment arm for P_{sH} (ft)

z = depth below the ground surface (ft)

α = failure surface orientation (deg)

α_e = inclination of Coulomb failure surface (deg) for external stability

α_i = inclination of Coulomb failure surface for internal stability (deg)

β = backfill slope angle, from horizontal at top of wall (deg)

β_{con} = equivalent backfill slope angle from horizontal at top of wall for conventional walls (deg)

β_{ext} = equivalent backfill slope angle for broken back slope for external calculations (deg)

β_{int} = equivalent backfill slope angle for broken back slope for internal calculations (deg)

β_{offset} = horizontal distance from the back of the top block to the crest of the slope (ft)

γ = unit weight of soil (pcf)

γ_d = moist unit weight of drainage fill (pcf)

γ_f = moist unit weight of foundation soil (pcf)

γ_{fl} = submerged unit weight of soil (pcf)

γ_i = moist unit weight of infill soil (pcf)

γ_r = moist unit weight of retained soil (pcf)

γ_{sat} = saturated unit weight (pcf)

γ_u = weight per unit volume for segmental units as placed including gravel in core/voids (pcf)

γ_{water} = water unit weight, 62.4 (pcf)

δ = interface friction angle (deg)

δ_c = wall to soil friction angle for internal stability analysis (deg)

δ_e = wall to soil friction angle for conventional walls (deg)

δ_i = wall to soil friction angle for internal stability analysis (deg)

ΔK_{dyn} = dynamic active earth pressure coefficient increment

ΔK_{dynH} = horizontal component of the dynamic active earth pressure coefficient increment

ΔK_{dynV} = vertical component of the dynamic active earth pressure coefficient increment

ΔP_{dyn} = dynamic earth force increment (lb/ft)

ΔP_{dynH} = horizontal component of the dynamic earth force increment (lb/ft)

ΔP_{dynV} = vertical component of the dynamic earth force increment (lb/ft)

Δ_u = setback per course (in.)

ε_d = long-term design strain for geosynthetic reinforcement

θ = seismic inertia angle (deg)

θ_{ext} = seismic inertia angle for conventional walls (deg)

Θ = inclination angle at the base of slice in slope stability analysis (deg)

λ_{cs} = apparent angle of friction for peak connection strength of segmental units to geosynthetic reinforcement (deg)

λ_{cs1} = apparent angle of friction between geosynthetic reinforcement and segmental units for the first line on a bilinear connection curve (deg)

λ_{cs2} = apparent angle of friction between geosynthetic reinforcement and segmental units for the second line on a bilinear connection curve (deg)

λ_u = apparent angle of friction between segmental units for peak shear capcity (deg)

μ_b = coefficient of interface friction for segmental unit sliding on soils

σ_a = lateral earth pressure for the active state (psf)

σ_n = normal stress (psf)

σ'_n = effective normal stress (psf)

σ_v = vertical soil stress (psf)

ϕ = peak friction angle (deg)

ϕ_d = angle of internal friction, drainage fill (deg)

ϕ_f = angle of internal friction, foundation soil (deg)

ϕ_i = angle of peak internal friction for the reinforced soil (deg)

ϕ_r = angle of internal friction, retained soil (deg)

ϕ_{rc} = angle of internal friction,retained soil for conventional walls (psi)

τ = shear strength

ω = unit inclination or facing batter due to setback per SRW unit H_u (deg)

REFERENCES

[1] Jones, Colin J.F.P., "Earth Reinforcement and Soil Structures," Butterworths, London, England, 1985.

[2] Vidal, H., "The Principle of Reinforced Earth," Highway Research Record 282, Highway Research Board, National Research Council, Washington, DC, 1969.

[3] Lee, K.L., Adams, B.D., and Vangneron, J.J., "Reinforced Earth Retaining Walls," Jl.S.M.F.E., Div. Proc., ASCE, 99, No. SM10, 1973.

[4] Mitchell, J.K., et.al. "Reinforcement of Earth Slopes and Embankments," NCHRP Report 290, Transportation Research Board, Washington, DC, 1987.

[5] Bell, J.R., Stilling, A.N., and Vandre, B., "Fabric Retained Earth Walls," Proceedings, 13th Annual Geology and Soils Engineering Symposium, Moscow, ID, 1975.

[6] Koerner, R.M., "Designing With Geosynthetics," Prentice-Hall, Englewood Cliffs, NJ, Fifth Edition, 2005.

[7] Task Force 27, In-Situ Soil Improvement Techniques, "Design Guidelines for Use of Extensible Reinforcements for Mechanically Stabilized Earth Walls in Permanent Applications," Joint Committee of AASHTO-AGC-ARTBA, AASHTO, Washington, DC, 1990.

[8] Terzaghi, K., and Peck, R.B., "Soil Mechanics in Engineering Practice," John Wiley & Sons, Inc., New York, NY, 2nd Edition, 1967.

[9] Christopher, B.R., and Holtz, R.D., Geotextile Engineering Manual, Report No. FHWA-TS-861203, Federal Highway Administration, Washington, DC, 1986.

[10] Jewel, R.A., and Greenwood, J.H., "Long Term Strength and Safety in Steep Soil Slopes Reinforced by Polymer Materials," Reprint of Paper for Geotextiles and Geomembranes (February, 1988).

[11] AASHTO, "Standard Specifications for Transportation Materials and Methods of Sampling and Testing," AASHTO, Washington, DC, August, 1986.

[12] Soil Mechanics and Foundations and Earth Structures, NAVFAC DM-7.1 & 7.2, Department of the Navy, May, 1982.

[13] Vesic, A., "Bearing Capacity of Shallow Foundations," Chapter 3, Foundation Engineering Handbook, Winterkorn and Fang, editors, Van Nostrand Reinhold Co., New York, NY, 1975.

[14] Richardson, G., and Behr, L., "Geotextile Reinforced Wall: Failure and Remedy," Geotechnical Fabrics Report, IFAI, St. Paul, MN, Volume 6, Number 4, July/August 1988.

[15] United States Steel, "Steel Sheet Piling Design Manual," United States Steel, Pittsburg, PA, 1972.

[16] "Symposium of Earth Reinforcement," An American Society of Civil Engineers Symposium, ASCE Convention, Pittsburgh, PA, 1978.

[17] Lambe, T.W., and Whitman, R.V. "Soil Mechanics," J. Wiley & Sons, New York, NY, 1969.

[18] Carroll, R.G., "Geotextile Filter Criteria," TRB 916, Engineering Fabrics in Transportation Construction, Washington, DC, pp. 46-53, 1983.

[19] Christopher, B.R., et.al., "Reinforced Soil Structures: Vol. I, Design and Construction Guidelines," Report No. FHWA-RD-89-043, November 1989.

[20] Peck, R.B., Hansen, W.E. & Thornburn, T.H., "Foundation Engineering," John Wiley & Sons, New York, NY, Second Edition, 1974.

[21] Elias, V., "Durability/Corrosion of Soil Reinforced Structures," Report No. FHWA-RD-89-186, December, 1990.

[22] Berg, R.R., "Guidelines for Design, Specification, & Contracting of Geosynthetic Mechanically Stabilized Earth Slopes on Firm Foundations," U.S. Department of Transportation, Federal Highway Administration, Washington, D.C., publication pending, 1993.

[23] Jumikis, Alfred R., "Soil Mechanics," D. Van Nostrand Company, Inc., New York, NY, 1962.

[24] "Foundation Engineering Handbook," Winterkorn and Fang, editors, Van Nostrand Reinhold Co., New York, NY, 1975.

[25] Perloff, W.H., and Baron, W., "Soil Mechanics, Principles and Applications," John Wiley & Sons, New York, NY, 1991.

[26] Duncan, J.M., Low, B.K., Schaeffer, V.R., "STABGM: A Computer Program for Slope Stability Analysis of Reinforced Embankments," Virginia Polytechnic Institute, Department of Civil Engineering, Blacksburg, VA 24601, 1985.

[27] Wright, S.G., "UTEXAS2: A Computer Program for Slop Stability Calculations," Geotechnical Engineering Software GS86-1, Geotechnical Engineering Center, Civil Engineering Department, The University of Texas at Austin, Austin, TX 78712, February, 1986.

[28] Wagner, A.A., "The Use of the Unified Soil Classification System by The Bureau of Reclamation," Proc. 4th Intl Conf. Soil Mechanics & Foundation Engineering (London) Volume I, 1957.

[29] Simac, M.R., "Design Methodology for Miragrid Reinforced Soil Retained Walls," Simac & Mirafi Inc., Charlotte, NC, 1990.

[30] Bathurst, R.J., Crowe, R.E., Simac, M.R., "Recent Innovations in Modular-Facing Retaining Wall Structures Using Geosynthetic Reinforcement," Canadian Society of Civil Engineering Conference, Vancouver, BC, May, 1991.

[31] Carroll, R.G., and Richardson, G.N., "Geosynthetic Reinforced Retaining Walls," 3rd International Conference on Geotextiles, Vienna, Austria, pp. 389-394, 1986.

[32] Anderson, R.B., Boyd, F.N., and Shaw, L., "Modular Block Faced Polymer Geogrid Reinforced Soil Walls U.S. Postal Service Combined Carrier Facility," Proceedings of Geosynthetics '91, IFAI, St. Paul, MN, 1991.

[33] Simac, M.R., Christopher, B.R., Bonczkiewicz, C., "Instrumented Field Performance of a 6 m Geogrid Soil Wall," 4th International Conference on Geotextiles, Geomembranes & Related Products, The Hague, Netherlands, 1990.

[34] Berg, R.R., "The Technique of Building Highway Retaining Walls," Geotechnical Fabrics Report, Vol. 9, No. 5, IFAI, St. Paul, MN, pp. 38-43, July/August 1991.

[35] Simac, M.R., Bathurst, R.J., Goodrum, R.A., "Design and Analysis of Three Reinforced Soil Retaining Walls," Proceedings of the Geosynthetics '91 Conference, Vol. 2, Atlanta, pp. 781-789, Feb. 1991.

[36] AASHTO, "Standard Specifications for Highway Bridges," AASHTO, Washington, DC, 17th edition, 2002.

[37] Bathurst, R.J., Benjamin, D.J., and Jarrett, P.M., "Laboratory Study of Geogrid Reinforced Soil Walls," Geosynthetics for Soil Improvement, ASCE National Convention, Nashville, TN, pp. 178-192, 1988.

[38] American Society of Civil Engineer, "Structural Plastics Selection Manual," ASCE Manuals and Reports on Engineering Practice No. 66, prepared by Task Committee on Properties of Selected Plastics Systems of the Structural Plastics Research Council of the Technical Council on Research of ASCE, New York, NY, 1985.

[39] Bathurst, R.J., and Simac, M.R., "Review of Three Instrumented Geogrid Reinforced Soil Retaining Walls," Geosynthetics: Design and Performance, Vancouver Geotechnical Society - 6th Annual One Day Symposium, May, 1991.

[40] Desert Earth Engineering and Tensar Corp., "Tensar Geogrid-Reinforced Soil Wall," FHWA Report No. FHWA-EP-90-001-005, NTIS, Springfield, VA, Jan. 1989.

[41] Anderson, R.B., and Blackwell, R.O., "Behind the Wall: Making More Efficient Use of Soil Reinforcement," Geotechnical Fabrics Report, St. Paul, MN, July/Aug. 1989.

[42] Yako, M.A., and Christopher, b.R., "Polymerically Reinforced Retaining Walls and Slopes in North America," The Application of Polymeric Reinforcement in Soil Retaining Structures, NATO Conference, Royal Military College of Canada, Jarrett and McGown editors, 1987.

[43] Christopher, B.R., Holtz, R.D. and Allen, T.M., "Instrumentation for a 12.6 m High Geotextile-Reinforced Wall," Proceedings of the International Reinforcement Soil Conference, Glasgow, 10-12 September, 1990.

[44] "Effects of Variations in Curing and During on the Physical Properties of Concrete Masonry Units," Bulletin D13, Kuenning, William H. & Carlson, C.C., PCA, Research and Development Laboratories, 1956.

[45] "Laboratory Freeze-Thaw Resistance of Concrete Masonry," Shideler, J.J. & Toennies, H.T., Portland Cement Association, Nov, 1967.

[46] Exxon Chemical Geopolymers, LTD, Pontypool, Gwenl, UK, Geotextiles: Designing for Soil Reinforcement, 1989.

[47] Bush, D.I., "Variation of Long-Term Design Strength of Geosynthetics in Temperatures up to 40°C," Proceeding 4th Int'l Conference on Geotextiles, Geomembranes and Related Products. The Hague, pp.673-676; AA Balkema, Vermont, 1940.

[48] ASTM, "1992 Annual Book of ASTM Standards for Soil and Rock, Dimension Stone; and Geosynthetics," ASTM, Philadelphia, PA, 1992.

[49] Ritchie, T. and Davison, J.I., "Moisture Content and Freeze/Thaw Cycles of Masonry Materials," Journal of Materials, UMLSA, Vol. 3, No. 3, pp. 658-671, Sept. 1968.

[50] NEHRP Recommended Provisions for the Development of Seismic Regulations for New Buildings - 1991 Edition, Prepared by Building Seismic Safety Council for Federal Emergency Management Agency, FEMA 222, January 1992.

[51] Yoder, E.J. and Witczak, M.W., "Principles of Pavement Design," John Wiley & Sons, New York, New York, 2nd Edition, 1975.

[52] Holtz, R.D. and Kovacs, W.D., "An Introduction to Geotechnical Engineering," Prentice-Hall, Inc., Englewood Cliffs, NJ, 1981.

[53] Koerner, R.M., Lord, A.E., and Hsuara, X.K., "Arrhenius Modeling to Predict Geosynthetic Degradation," Geotextiles and Geomembranes, Elsevier Science Publishers, Great Britain, Vol. II., pp. 151-183, 1992.

[54] Allen, T. "Determination of Long-Term Tensile Strength of Geosynthetics; A State of the Art Review," Geosynthetic 91, Atlanta, GA, IFAI, St. Paul, MN, pp. 351-379, 1991.

[55] Bonaparte, R. and Berg, R., "Long-Term Allowable Tension for Geosynthetic Reinforcement," Proceedings of Geosynthetics '87 Conference, Vol 1, New Orleans, pp. 181-192, 1987.

[56] Arman, A., Collin, J.G., Hung, J.C.H., and Brouillette, R.P., Shallow Foundations Reference Manual, Federal Highway Administration DTFH61-97-C-00025, June, 2001.

[57] "Seismic Design Manual for Segmental Retaining Walls," TR 160, National Concrete Masonry Association, Herndon, VA, 1998.

[58] Elias, V., Christopher, B.R., and Berg, R.R., "Mechanically Stabilized Earth Walls and Reinforced Soil Slopes Design and Construction Guidelines," FHWA NHI-00-043, 2001.

[59] US Army Corps of Engineers, EM 1110-2-1902, Slope Stability, US Army Corps of Engineers, Washington, DC, 2003.

[60] Collin, J.G., Hung, J.C., Lee, W.S., and Munfakh, G., "Soil Slopes and Embankment Design Reference Manual," Federal Highway Administration DTFH61-97-C-00025, March, 2001.

[61] Cedergren, H.R., Seepage Drainage and Flow Nets, Wiley, New York, 1989.

[62] Holtz, Robert D., Christopher, Barry R., and Berg, Ryan R., "Geosynthetic Engineering," BiTech Publishing, British Columbia, Canada, 1997.

[63] Holtz, Robert D., Christopher, Barry R., and Berg, Ryan R., "Geosynthetic Design and Construction Guidelines Manual," FHWA NHI 132013, 1997.

[64] "Design Manual for Segmental Retaining Walls," TR 127A, National Concrete Masonry Association, Herndon, VA, 1993.

[65] "Segmenal Retaining Wall Drainage Manual," TR 204, National Concrete masonry Association, Herndon, VA, 2002.

[66] Duncan, James M., Wright, Stephen G., "Soil Strength and Slope Stability," John Wiley & Sons, Inc. New Jersey, 2005.

[67] ASTM, "2009 Annual Book of ASTM Standards, Section Four, Construction," ASTM, Philadelphia, PA, 2009.

[68] Ling, Hoe, Leshchinsky Dov, Bott, Tim, "Executive Summary Seismic Testing – Geogrid Reinforced Soil Structures Faced with Segmental Retaining Wall Block," Columbia University, NY, 2002.

[69] *Design Software for Segmental Retaining Walls, SRWall (Version 4.0)*, National Concrete Masonry Association, 2009.

[70] *Standard Test Method for Determining the Connection Strength Between Geosynthetics Reinforcement and Segmental Concrete Units,* ASTM D 6638-07, ASTM International (2007).

[71] *Standard Test Method for Determining the Shear Strength Between Segmental Concrete Units,* ASTM D 6916-06c, ASTM International (2006).

[72] *Standard Test Method for Direct Shear Test of Soils Under Consolidated Drained Conditions,* ASTM D 3080-04, ASTM International (2004).

[73] *Standard Test Method for Consolidated Undrained Triaxial Compression Test for Cohesive Soils,* ASTM D 4767-04, ASTM International (2004).

[74] *Standard Test Method for Determining the Coefficient of Soil and Geosynthetic or Geosynthetic and Geosynthetic Friction by the Direct Shear Method,* ASTM D 5321-08, ASTM International (2008).

[75] *Standard Test Method for Laboratory Compaction Characteristics of Soil Using Standard Effort (12 400 ft-lbf/ft^3(600 kN-m/m^3)),* ASTM D 698-07, ASTM International (2007).

[76] *Standard Test Method for Laboratory Compaction Characteristics of Soil Using Modified Effort (56,000 ft-lbf/ft^3 (2,700 kN-m/m^3)),* ASTM D 1557-07, ASTM International (2007).

[77] *Standard Practice for Description and Identification of Soils (Visual-Manual Procedure),* ASTM D 2488-09, ASTM International (2009).

[78] *Standard Test Methods for Sampling and Testing Concrete Masonry Units and Related Units,* ASTM C 140-01a, ASTM International (2001).

[79] *Standard Test Methods for Evaluating the Freeze-Thaw Durability of Manufactured Concrete Masonry Units and Related Concrete Units,* ASTM C 1262-98e1, ASTM International (1998).

[80] *Standard Specification for Dry-Cast Segmental Retaining Wall Units,* ASTM C 1372-04e2, ASTM International (2004).

[81] *Standard Test Methods for Tensile Properties of Geotextiles by the Wide-Width Strip Method,* ASTM C 4595-09, ASTM International (2009).

[82] *Standard Test Methods for Evaluating the Unconfined Tension Creep and Creep Rupture Behavior of Geosynthetics,* ASTM C 5262-07, ASTM International (2007).

[83] *Standard Test Method for Determining the Coefficient of Soil and Geosynthetic or Geosynthetic and Geosynthetic Friction by the Direct Shear Method,* ASTM D 5321-08, ASTM International (2008).

[84] *Standard Practice for Exposure and Retrieval of Samples to Evaluate Installation Damage of Geosynthetics*, ASTM D 5818 - 06, ASTM International (2006).

[85] *Standard Test Method for Determining Tensile Properties of Geogrids by the Single or Multi-Rib Tensile Method*, ASTM D 6637 - 01, ASTM International (2001).

[86] *Standard Test Method for Measuring Geosynthetic Pullout Resistance in Soil,* ASTM D 6706 - 01(2007), ASTM International (2007).

[87] *Standard Test Method for Particle-Size Analysis of Soils,* ASTM D 422 - 63(2007), ASTM International (2007).

[88] *Standard Test Method for Density and Unit Weight of Soil in Place by the Sand-Cone Method,* ASTM D 1556 - 07, ASTM International (2007).

[89] *Standard Practice for Classification of Soils for Engineering Purposes (Unified Soil Classification System),* ASTM D 2487 - 06e1, ASTM International (2006).

[90] *Standard Test Method for In-Place Density and Water Content of Soil and Soil-Aggregate by Nuclear Methods (Shallow Depth),* ASTM D 6938 - 08a, ASTM International (2008).

[91] *Standard Test Methods for Liquid Limit, Plastic Limit, and Plasticity Index of Soils,* ASTM D 4318 - 05, ASTM International (2005).

[92] *Standard Test Methods for Particle-Size Distribution (Gradation) of Soils Using Sieve Analysis,* ASTM D 6913 - 04e2, ASTM International (2004).

[93] *Standard Test Method for Measuring pH of Soil for Use in Corrosion Testing,* ASTM G 51 - 95(2005), ASTM International (2005).

[94] *Standard Specification for Corrugated Polyethylene (PE) Pipe and Fittings,* ASTM F 405 - 05(2005), ASTM International (2005).

[95] *Standard Specification for Smooth-Wall Poly(Vinyl Chloride) (PVC) Plastic Underdrain Systems for Highway, Airport, and Similar Drainage,* ASTM F 758 - 95(2007)e1, ASTM International (2007).

[96] *Standard Test Method for Determining Apparent Opening Size of a Geotextile,* ASTM D 4751 - 04, ASTM International (2004).

[97] *Standard Test Method for Grab Breaking Load and Elongation of Geotextiles,* ASTM D 4632 - 08, ASTM International (2008).

[98] *Standard Test Method for Trapezoid Tearing Strength of Geotextiles,* ASTM D 4533 - 04, ASTM International (2004).

[99] *Standard Test Methods for Water Permeability of Geotextiles by Permittivity,* ASTM D 4491 - 99A(2004) e1, ASTM International (2004).

[100] *Standard Test Method for Index Puncture Resistance of Geomembranes and Related Products,* ASTM D 4833 - 07, ASTM International (2007).

[101] *Direct Shear Test of Soils Under Consolidated Drained Conditions,* AASHTO T 236-08, Standard Specifications for Transportation Materials and Methods of Sampling and Testing, 29th Edition and AASHTO Provisional Standards, 2009 Edition.

[102] *Unconsolidated, Undrained Compressive Strength of Cohesive Soils in Triaxial Compression,* AASHTO T 296-05, Standard Specifications for Transportation Materials and Methods of Sampling and Testing, 29th Edition and AASHTO Provisional Standards, 2009 Edition.

[103] *Undrained Triaxial Compression Test on Cohesive Soils,* AASHTO T 297-94(2007), Standard Specifications for Transportation Materials and Methods of Sampling and Testing, 29th Edition and AASHTO Provisional Standards, 2009 Edition.

[104] *Corrugated Polyethylene Drainage Pipe,* AASHTO T 252-09, Standard Specifications for Transportation Materials and Methods of Sampling and Testing, 29th Edition and AASHTO Provisional Standards, 2009 Edition.

[105] Seed, H.B. and Whitman, R.V., "Design of earth retaining structures for dynamic loads," ASCE Specialty Conference: *Lateral Stresses in the Ground and Design of Earth Retaining Structures*, Cornell University, Ithaca, N.Y., pp.103-147, 22-24 June, 1970.

[106] Wolfe, W.E., Lee, K.L., Rea, D., and Yourman, A.M., "The Effect of Vertical Motion on the Seismic Stability of Reinforced Earth Walls," Proc. ASCE Symp. *On Earth Reinforcement*, Pittsburg, PA, USA, pp.856-879, April 1978.

[107] Bathurst, R.J. and Cai, Z., "In-Isolation Cyclic Load-Extension Behavior of Two Geogrids," Geosynthetics International, Vol. 1, No. 1, pp. 3-17, 1994.

[108] Bathurst, R.J. and Alfaro, M.C., "Review of Seismic Design, Analysis and Performance of Geosynthetic Reinforced Walls, Slopes and Embankments," Invited keynote paper, IS-Kyushu 1996, 3rd International Symposium on Earth Reinforcement, Fukuoka, Kyushu, Japan, p. 30, 12-14 November 1996.

[109] Bowles, Joseph E., Foundation Analysis and Design, The McGraw-Hill Companies, Inc., New York, 1982.

[110] *Standard Test Method for Accelerated Tensile Creep and Creep-Rupture of Geosynthetic Materials Based on Time-Temperature Superposition Using Stepped Isothermal Method,* ASTM D 6992, ASTM International (2003).

[111] *Standard Practice for Determining the Specification Conformance of Geosynthetics,* ASTM C 4759-02(2007), ASTM International (2007).